Sedelon

Sedelon Valve Co., Ltd

Address: Baoyi Industry Zone, Oubei, Wenzhou, Zhejiang, China
Tel: +86-577-67926789 +86-577-67927781
Fax: +86-577-67927789
E-mail: sales@sedelon.com
www.sedelon.com

Sedelon

Check Valve

- Carbon Steel Swing Check Valve
- Pressure Seal Swing Check Valve
- Wafer Check Valve
- Forged Steel Check Valve
- Y Strainer

www.sedelon.com

Company Profile

SEDELON is an American-based, dynamic valve manufacturer and major supplier in the global valve market for the most diverse types of applications in oil and gas, petrochemical, marine and thermal power industries. SEDELON is a team of competent and experienced professionals, fuelled by whom, the company emerged as one of the most cost-effective global manufacturer.

SEDELON's high-quality products, market know-how and state-of-the-art production facilities accredit us as a reliable and professional partner and agent to the needs of clients. As a specialist in the design and manufacture of industrial valves, we present a full range of valve types from 1/2" to 48" and pressure rating from 150LB to 2500LB. SEDELON products are also suitable for ultrahigh and ultralow temperature conditions and function well even in severe environment. Our broad product line can meet demanding requirements and is synonymous with high quality, innovation and reliability.

Sedelon

Quality Assurance

SEDELON is certified by API 600, API 6D, API 607, API 6FA, API 624, CE, ISO 9001, ISO 45001, ISO 14001, ISO 15848-1, etc. All activities are performed under the highest international standards to ensure the quality, safety and reliability of products' excellent service.

The company operates in conformity with the QMS (Quality Management System) in which every step is set aims to achieve the overall goal of meeting and satisfying customers' requirements.

Adhere to the standard of QMS, ITP (Inspection and Test Plan) is a checklist to assure products quality at every critical point. ITP is conducted by the quality manager and operated by qualified inspectors.

API
API 6D-2077
API 600-0399

Q1
API Q1-4885

API-ISO
ISO 9001-5148

ISO
ISO 9001
ISO 14001
ISO 45001

CE
CE-2435

TÜV SÜD
API 624
API 6FA
API 607
ISO 15848-1

SGS

ABS

Sedelon

SEDELON managers at all levels and all employees observe the QMS. The management periodically review and continuously improve the effectiveness of the QMS. Vendor evaluation and calibration of various aspects is conducted regularly. Necessary and suitable resources is provided for the implementation and improvement of the QMS.

The significance of quality of both products and service is taken into account by SEDELON at all times. The satisfaction of esteemed customers is achieved through high quality products and comprehensive service as well as the commitment to meet their requirements. Applicable and achievable objectives and targets are set for all processes and activities relevant to quality and customer satisfaction.

www.sedelon.com

Product Warranty

Within eighteen months of completion inspection or within twelve months of the start of usage, whichever is shortest, SEDELON valve will repair or replace products or the faulty components of products free of charge in the event of failure under normal usage attributable to inadequate design or manufacturing on the part of SEDELON valve. However, repairs or replacements will be charged in any of the following cases. Also note that if a separate agreement is in effect, that agreement shall take precedence.

(1) When the product has been used in an incorrect manner which deviates from the catalog or instruction manual;

(2) When the product failure is due to careless handling such as jamming with foreign substances or the sticking of excessive water stain;

(3) When the product has been disassembled, repaired or altered by a third party other than SEDELON;

(4) When the product has been subject to cases beyond the control of valve including natural disaster such as wind or flood damage, earthquakes and electrical storm, fire, pollution (special environments), salt damage, war or acts of terror;

(5) When a failure is due to any other factor deemed to be the responsibility of SEDELON valve.

CARBON STEEL SWING CHECK VALVE

Design Feature

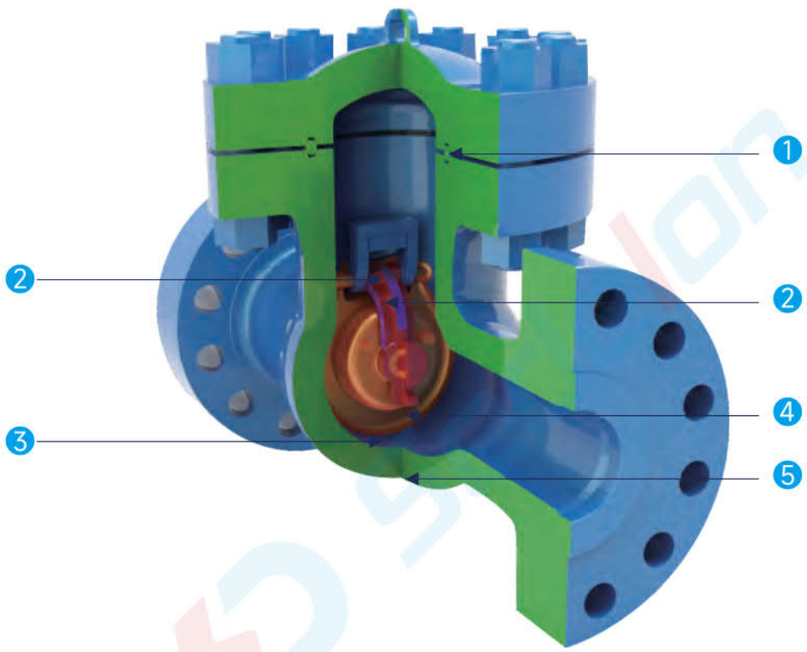

1. Spiral wound gasket for Class 150 to Class 600 valves, and ring joint for Class 900 & above valves or as an option for the Class 600 valves on customer request.
2. A hinge and hinge pin provided and mounted so as to permit full movement of the disc.
3. Standard renewable seal welded seat with stellite 6 while optional screwed-in seat.
4. Standard swing disc type, used in horizontal position for liquid service application or used in vertical position where liquid flow from bottom to top.
5. Provision of standard bosses for a drain tapping at location G at the lower part of body centerline.Additional bosses conform to customer requirements.

CARBON STEEL SWING CHECK VALVE

Material List

Part	Standard	Low Temperature Service	High Temperature Service	Stainless Steel	Sour Service
BODY	ASTM A216-WCB	ASTM A352-LCC	ASTM A217-WC9	ASTM A351-CF8M	ASTM A216-WCB
COVER	ASTM A216-WCB	ASTM A352-LCC	ASTM A217-WC9	ASTM A351-CF8M	ASTM A216-WCB
DISC	ASTM A217-CA15(4"& Smaller) &ASTM A216-WCB	ASTM A352-LCC/316 OVERLAY	ASTM A217-WC9/ STL. OVERLAY	ASTM A351-CF8M	ASTM A217-CA15 (4"& Smaller) & ASTM A216-WCB
HINGE	ASTM A216-WCB	ASTM A352-LCC	ASTM A217-WC9	ASTM A351-CF8M	ASTM A216-WCB
SEAT RING	ASTMA105/STL. OVERLAY	ASTM A350 LF2 OVERLAY	INT./STL. OVERLAY	INT./STL. OVERLAY	ASTM A105/STL. OVERLAY
HINGE PIN	ASTM A276-410	ASTM A276-316	ASTM A276-410	ASTM A276-316	ASTM A276-410
GASKET	316LSS+Graphite	316LSS+Graphite	316LSS+Graphite	316LSS+Graphite	316LSS+Graphite
BOLT	ASTM A193-B7	ASTM A320-L7M	ASTM A193-B16	ASTM A193-B8M	ASTM A193-B7M
DISC NUT	ASTM A194-2H	ASTM A194-7M	ASTM A194-4	ASTM A194-8M	ASTM A194-2HM
DISC SPLIT PIN	ASTM A276-420	ASTM A276-316	ASTM A276-420	ASTM A276-316	STAINLESS STEEL
BONNET RING JOINT	S-Soft Steel	S-Soft Steel	S-Soft Steel	S-Soft Steel	S-Soft Steel
BONNET STUD	ASTM A193-B7	ASTM A320-L7M	ASTM A193-B16	ASTM A193-B8M	ASTM A193-B7M
BONNET NUT	ASTM A194-2H	ASTM A194-7M	ASTM A194-4	ASTM A194-8M	ASTM A194-2HM
NAME PLATE	STAINLESS STEEL	STAINLESS STEEL	STAINLESS STEEL	STAINLESS STEEL	STAINLESS STEEL

CARBON STEEL SWING CHECK VALVE

Dimension & Weight

Class 150

Cast Carbon Steel Check Valve

BS 1868 Design,

Bolted Cover,

Swing Type Disc

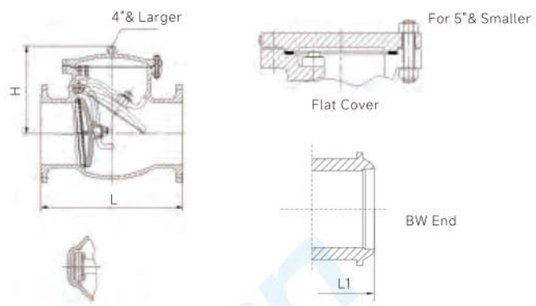

NPS	in	2"	2-1/2"	3"	4"	5"	6"	8"	10"	12"	14"	16"	18"	20"	24"	26"	28"	30"	32"	36"	40"	42"	48"
DN	mm	50	65	80	100	125	150	200	250	300	350	400	450	500	600	650	700	750	800	900	1000	1050	1200
L-L1 (RF-BW)	in	8	8.5	9.5	11.5	13	14	19.5	24.5	27.5	31	34	38.5	38.5	51	51	57	60	68	77	85	89	101
	mm	203	216	241	292	330	356	495	622	699	787	864	978	978	1295	1295	1448	1524	1727	1956	2159	2261	2566
H	in	5.9	6.6	6.7	8	9.1	11.7	13.8	15.3	17.2	18.8	20.7	22.9	24.7	34.6	35.8	36.8	38.2	49.2	54.2	55.5	57.8	64.6
	mm	151	168	171	204	230	297	352	390	438	477	525	582	627	880	910	935	970	1250	1377	1410	1468	1642
WT(RF)	KG	15	20	28	42	57	79	125	252	374	480	642	784	934	1336	1526	1936	2020	2430	3738	-	5910	-
WT(BW)	KG	10	15.5	21.2	32	45	64	103	189	327	423	541	696	829	1276	1250	1680	1945	2062	3256	-	5246	-

Class 300

Cast Carbon Steel Check Valve

BS 1868 Design,

Bolted Cover,

Swing Type Disc

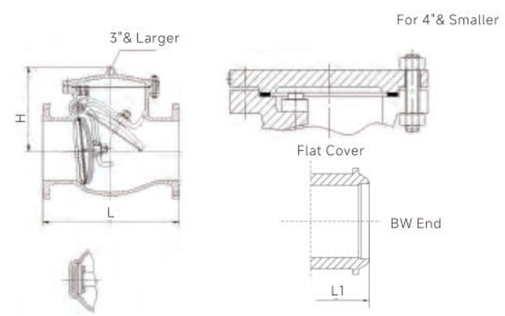

NPS	in	2"	2-1/2"	3"	4"	5"	6"	8"	10"	12"	14"	16"	18"	20"	24"	26"	28"	30"	32"	36"	40"	42"	48"
DN	mm	50	65	80	100	125	150	200	250	300	350	400	450	500	600	650	700	750	800	900	1000	1050	1200
L-L1 (RF-BW)	in	10.5	11.5	12.5	14	15.75	17.5	21	24.5	28	33	34	38.5	40	53	53	59	62.75	68	82	96	103	124
	mm	267	292	318	356	400	445	533	622	711	838	864	978	1016	1346	1346	1499	1594	1727	2083	2438	2617	3151
H	in	6.9	7.3	8.5	10.2	12	12.5	15	17.1	20.1	22.1	23.5	26.6	28.7	33.9	36.6	45.8	50.0	50.0	59.4	68.9	73.6	87.8
	mm	176	185	216	259	304	317	380	434	511	561	596	675	730	860	930	1163	1270	1270	1510	1750	1870	2230
WT(RF)	KG	20	26	40	65	82	118	223	310	494	702	882	1094	1382	2162	2375	2995	3680	-	6280	-	-	-
WT(BW)	KG	14	23	30	48	60	92	170	245	360	520	565	850	1004	1842	1995	2495	2780	-	5514	-	-	-

CARBON STEEL SWING CHECK VALVE

Dimension & Weight

Class 600

Cast Carbon Steel Check Valve

BS 1868 Design,

Bolted Cover,

Swing Type Disc

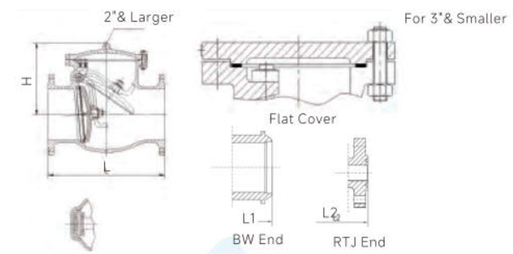

NPS	in	2"	2-1/2"	3"	4"	5"	6"	8"	10"	12"	14"	16"	18"	20"	24"	26"	28"	30"	32"	36"	40"	42"	48"
DN	mm	50	65	80	100	125	150	200	250	300	350	400	450	500	600	650	700	750	800	900	1000	1050	1200
L-L1 (RF-BW)	in	11.5	13	14	17	20	22	26	31	33	35	39	43	47	55	57	63	65	70	82	90	96	100
	mm	292	330	356	432	508	559	660	787	838	889	991	1092	1194	1397	1448	1600	1651	1778	2083	2286	2438	2540
L2(RTJ)	in	11.62	13.12	14.12	17.12	20.12	22.12	26.12	31.12	33.12	35.12	39.12	43.12	47.25	55.38	57.5	63.5	65.5	70.6	82.6	-	-	-
	mm	295	333	359	435	511	562	663	790	841	892	994	1095	1200	1407	1461	1613	1664	1794	2099	-	-	-
H	in	7.2	8.3	9.1	10.4	11.6	14.7	16.8	20.4	22.4	24.5	26.8	29.6	38.4	43.7	43.7	46.9	52.1	53.8	60.7	67.0	70.9	85.5
	mm	184	210	232	263	295	374	426	517	569	622	680	752	975	1111	1110	1192	1324	1367	1542	1702	1800	2171
WT(RF)	KG	30	43	55	94	155	228	396	530	730	1000	1430	1510	2258	3440	4255	5075	6130	-	9905	-	-	-
WT(BW)	KG	23	35	43	85	120	160	233	455	616	840	1030	1365	1888	2950	3619	4360	5338	-	8895	-	-	-

Class 900

Cast Carbon Steel Check Valve

BS 1868 Design,

Bolted Cover,

Swing Type Disc

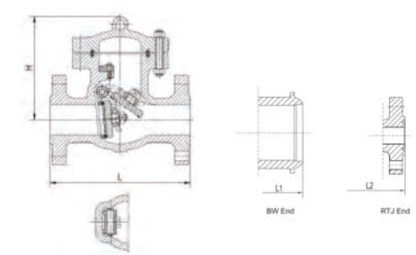

NPS	in	2"	2-1/2"	3"	4"	6"	8"	10"	12"	14"	16"	18"	20"	24"	26"	28"	30"	32"	36"
DN	mm	50	65	80	100	150	200	250	300	350	400	450	500	600	650	700	750	800	900
L-L1 (RF-BW)	in	14.5	16.5	15	18	24	29	33	38	40.5	44.5	48.0	52.0	61.0	65.0	69.0	73.0	77.0	84.9
	mm	368	419	381	457	610	737	838	965	1029	1130	1219	1321	1549	1651	1753	1854	1956	2156
L2(RTJ)	in	14.62	16.62	15.12	18.12	24.12	29.12	33.12	38.12	40.88	44.88	48.5	52.5	61.7	65.9	69.9	73.9	-	-
	mm	371	422	384	460	613	740	841	968	1038	1140	1232	1333	1568	1673	1775	1876	-	-
H	in	11.7	11.8	11.8	12.9	17.4	19.8	26.1	30.5	30.8	33	33.0	36.7	36.4	44.1	54.0	59.9	65.8	71.7
	mm	296	300	300	327	441	502	664	775	782	838	839	932	924	1121	1372	1521	1671	1821
WT(RF)	KG	70	100	96	150	286	542	815	1125	1310	1845	2320	3500	5200	6600	-	-	-	-
WT(BW)	KG	60	86	80	115	210	404	600	922	1084	1528	1945	3035	4650	5630	-	-	-	-

CARBON STEEL SWING CHECK VALVE

Dimension & Weight

Class 1500

Cast Carbon Steel Check Valve

BS 1868 Design,
Bolted Cover,
Swing Type Disc

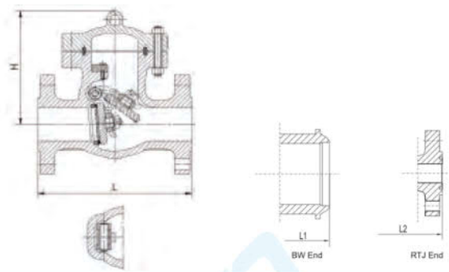

NPS	in	2"	2-1/2"	3"	4"	6"	8"	10"	12"	14"	16"	18"	20"	24"	26"	28"	30"
DN	mm	50	65	80	100	150	200	250	300	350	400	450	500	600	650	700	750
L-L1 (RF-BW)	in	14.5	16.5	18.5	21.5	27.75	32.75	39	44.5	49.5	54.5	60.5	65.5	76.5	82.0	87.5	83.0
	mm	368	419	470	546	705	832	991	1130	1257	1384	1537	1664	1943	2083	2222.5	2362
L2(RTJ)	in	14.62	16.62	18.62	21.62	28.00	33.12	39.38	45.12	50.25	55.38	61.4	66.4	77.6	-	-	-
	mm	371	422	473	549	711	841	1000	1146	1276	1407	1559	1686	1972	-	-	-
H	in	11.7	11.8	13.4	16.2	20.1	26.8	29.8	33.7	37.4	40.1	45.2	50.6	60.6	70.6	80.7	90.7
	mm	296	300	341	412	511	680	756	857	950	1020	1147	1284	1539	1794	2049	2304
WT(RF)	KG	70	100	135	216	500	818	1560	2015	2780	3880	5100	6200	-	-	-	-
WT(BW)	KG	56	68	75	150	406	670	1245	1639	2150	3140	4220	5430	-	-	-	-

Class 2500

Cast Carbon Steel Check Valve

BS 1868 Design,
Bolted Cover,
Swing Type Disc

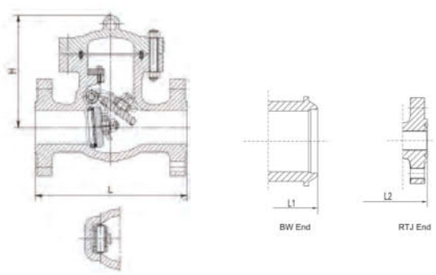

NPS	in	2"	2-1/2"	3"	4"	6"	8"	10"	12"	14"	16"	18"	20"	24"
DN	mm	50	65	80	100	150	200	250	300	350	400	450	500	600
L-L1 (RF-BW)	in	17.75	20	22.75	26.5	36	40.25	50	56	62.0	68.0	73.9	79.9	91.9
	mm	451	508	578	673	914	1022	1270	1422	1575	1727	1877	2029	2334
L2(RTJ)	in	17.87	20.25	23.00	26.88	36.50	40.87	50.88	56.88	-	-	-	-	-
	mm	454	514	584	683	927	1038	1292	1445	-	-	-	-	-
H	in	16.4	16.5	17.4	18.9	20.1	28	33.5	39.4	47.2	51.2	55.1	59.1	63.0
	mm	416	419	441	479	511	711	851	1000	1200	1300	1400	1500	1600
WT(RF)	KG	145	210	224	365	806	1525	2295	-	-	-	-	-	-
WT(BW)	KG	110	160	170	330	665	1216	1697	-	-	-	-	-	-

PRESSURE SEAL SWING CHECK VALVE

Design Feature

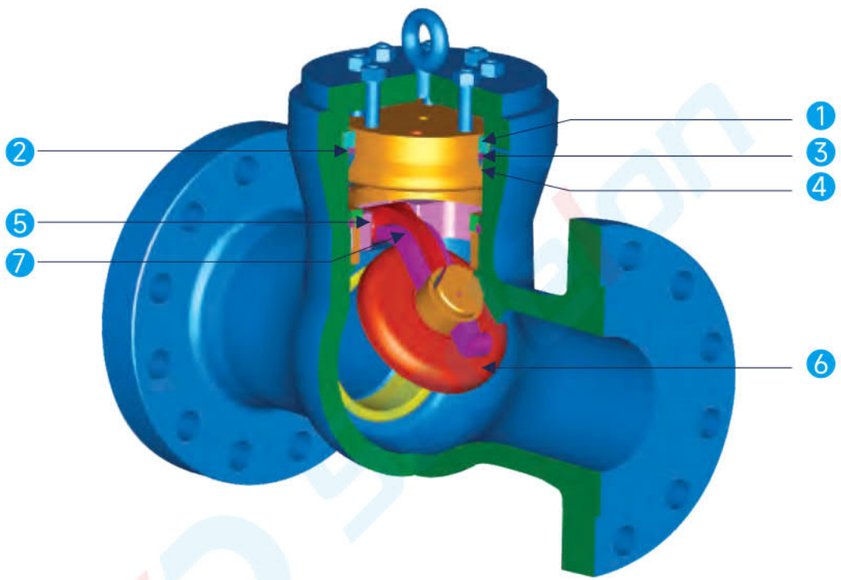

1. Separated rings absorb the thrust along the stem applied by the internal pressure.
2. Sealing rings are used to withstand pressure and prevent deformation of the gaskets.
3. Mild steel gasket seal to provide a large seal contact area for perfect sealing.
4. Stainless steel inlay to ensure soundness and corrosion-resistance in the critical body sealing zone for carbon and alloy steel valves.
5. Hinge pin design ensuring no pressure boundary intrusion.
6. Standard swing disc type to be used in horizontal position for liquid service applications or used in vertical position where liquid flow from bottom to top.
7. Hinge and hinge pin design to permit full movement of the disc.

PRESSURE SEAL SWING CHECK VALVE

Material List

Part	Standard	Stainless Steel	High Temperature Service		
BODY	ASTM A216-WCB	ASTM A351-CF8M	ASTM A217-WC6	ASTM A217-WC9	ASTM A217-C12A
COVER	ASTM A216-WCB ASTMA 105 (4"&Smaller)	ASTM A351-CF8M ASTM A 182-F316 (4"&Smaller)	ASTM A217-WC6 ASTM A 182-F11 (4"&Smaller)	ASTM A217-WC9 ASTM A 182-F22 (4"&Smaller)	ASTM A217-C12A ASTM A 182-F91 (4"&Smaller)
DISC	ASTM A217-CA15 & ASTM A216-WCB	ASTM A351-CF8M/STL. OVERLAY	ASTM A217-CA15 & ASTM A217-WC6	ASTM A217-CA15 & ASTM A217-WC9	ASTM A217-CA15
HINGE	ASTM A216-WCB	ASTM A351-CF8M	ASTM A217-WC6	ASTM A217-WC9	ASTM A217-C12A
HINGE PIN	ASTM A182-F6a	ASTM A276-316	ASTM A182-F6a	ASTM A182-F6a	ASTM A182-F6a
DISC NUT	ASTM A194-2H	ASTM A194-8M	ASTM A194-4	ASTM A194-4	ASTM A194-4
BONNET SEAL RING	GRAPHITE	GRAPHITE	GRAPHITE	GRAPHITE	GRAPHITE
HOOK SCREW	CARBON STEEL	STAINLESS STEEL	CARBON STEEL	CARBON STEEL	CARBON STEEL
COVER STUD	ASTM A193-B7	ASTM A193-B8M	ASTM A193-B16	ASTM A193-B16	ASTM A193-B16
COVER NUT	ASTM A194-2H	ASTM A194-8M	ASTM A194-4	ASTM A194-4	ASTM A194-4
SEAT RING	ASTMA105/STL OVERLAY	INT./STL. OVERLAY	INT./STL. OVERLAY	INT./STL. OVERLAY	ASTM A182-F6a/STL. OVERLAY
SEPARATE RING COVER	CARBON STEEL	ASTM A276-420	ANSI 4140	ANSI 140	ANSI 4140
THRUST RING COVER	CARBON STEEL	ASTM A276-420	ANSI 4140	ANSI 4140	ANSI 4140
SUPPORTING COVER	ASTM A105	ASTM A276-420	ANSI 4140	ANSI 4140	ANSI 4140
STOP RING	ASTM A276-420	ASTM A276-316	ASTM A276-420	ASTM A276-420	ASTM A276-420
SEPARATE RING FOR STOP RING	ASTM A276-420	ASTM A276-316	ASTM A276-420	ASTM A276-420	ASTM A276-420
SPLIT PIN	STAINLESS STEEL	STAINLESS STEEL	STAINLESS STEEL	STAINLESS STEEL	STAINLESS STEEL
STOP RING SCREW	STAINLESS STEEL	STAINLESS STEEL	STAINLESS STEEL	STAINLESS STEEL	STAINLESS STEEL
NAME PLATE	STAINLESS STEEL	STAINLESS STEEL	STAINLESS STEEL	STAINLESS STEEL	STAINLESS STEEL

PRESSURE SEAL SWING CHECK VALVE

Dimension & Weight

Class 600

Cast Carbon Steel Check Valve

ASME B16.34,

Pressure Seal Swing Disc Type

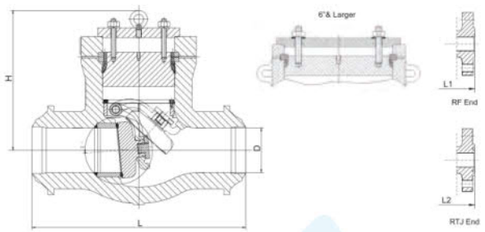

NPS	in	2"	2-1/2"	3"	4"	5"	6"	8"	10"	12"	14"	16"	18"	20"	24"	26"	28"	30"
DN	mm	50	65	80	100	125	150	200	250	300	350	400	450	500	600	650	700	750
L (RF-BW)	in	11.5	13	14	17	20	22	26	31	33	35	39	43	47	55	57	63	65
	mm	292	330	356	432	508	559	660	787	838	889	991	1092	1194	1397	1448	1600	1651
L2(RTJ)	in	11.62	13.12	14.12	17.12	20.12	22.12	26.12	31.12	33.12	35.12	39.12	43.13	47.25	55.38	57.5	63.5	65.5
	mm	295	333	359	435	511	562	663	790	841	892	994	1095	1200	1407	1461	1613	1664
H	in	9.5	10.4	10.6	12.5	15.7	15.7	23.1	23.9	27.4	29.5	28.7	28.8	32.3	37.4	39.38	43.25	47.25
	mm	241	264	270	318	400	400	587	606	695	749	730	730	819	949	1000	1099	1200
WT(RF)	KG	31	50	61	85	135	190	350	500	682	880	1150	-	-	4046	3100	3500	4000
WT(BW)	KG	25	42	49	76	85	130	260	370	568	660	850	-	-	3556	2500	2800	3150

Class 900

Cast Carbon Steel Check Valve

ASME B16.34,

Pressure Seal Swing Disc Type

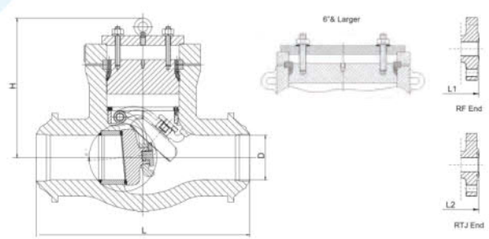

NPS	in	2"	2-1/2"	3"	4"	6"	8"	10"	12"	14"	16"	18"	20"	24"
DN	mm	50	65	80	100	150	200	250	300	350	400	450	500	600
L(BW)	in	8.5	10	12	14	20	26	31	36	39	43	43	43	52
	mm	216	254	305	356	508	660	787	914	991	1092	1092	1092	1321
L1(RF)	in	14.5	16.5	15	18	24	29	33	38	40.5	44.5	48	52	61
	mm	368	419	381	457	610	737	838	965	1029	1130	1219	1321	1549
L2(RTJ)	in	14.6	16.1	15.1	18.1	24.1	29.1	33.1	38.1	40.9	44.9	48.5	52.5	61.75
	mm	371	422	384	460	613	740	841	968	1038	1140	1232	1333	1568
H	in	9.5	10.4	10.6	12.5	15.7	23.1	23.9	27.4	29.5	28.7	33.5	34	37.8
	mm	241	264	270	318	400	587	606	695	749	730	851	864	959
WT(RF)	KG	42	55	61	110	250	450	825	995	1628	1733	2300	-	-
WT(BW)	KG	22	32	45	75	148	312	725	875	1281	1418	1850	-	-

PRESSURE SEAL SWING CHECK VALVE

Dimension & Weight

Class 1500

Cast Carbon Steel Check Valve

ASME B16.34,

Pressure Seal Swing Disc Type

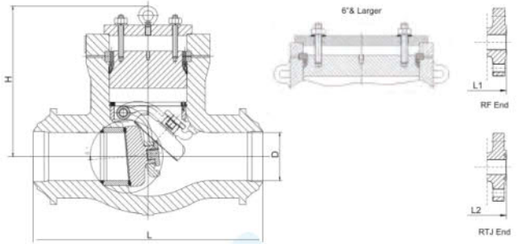

NPS	in	2"	2-1/2"	3"	4"	6"	8"	10"	12"	14"	16"	18"	20"	24"
DN	mm	50	65	80	100	150	200	250	300	350	400	450	500	600
L(BW)	in	8.5	10	12	16	22	28	34	39	42	47	47	47	76.5
	mm	216	254	305	406	559	711	864	991	1067	1194	1194	1194	1943
L1(RF)	in	14.5	16.5	18.5	21.5	27.8	32.8	39	44.5	49.5	54.4	60.5	65.5	76.5
	mm	368	419	470	546	705	832	991	1130	1257	1384	1537	1664	1943
L2(RTJ)	in	14.6	16.6	18.6	21.6	28	33.1	39.4	45.1	50.3	55.4	61.38	66.38	77.63
	mm	371	422	473	549	711	842	1000	1146	1276	1407	1559	1686	1972
H	in	9.5	10.4	10.8	12.5	16.6	18.9	23.3	25.4	28	29.5	34.63	37.38	43.25
	mm	241	264	274	318	422	479	591	645	711	749	880	949	1099
WT(RF)	KG	30	58	62	113	345	551	858	1628	1811	2539	3306	-	-
WT(BW)	KG	20	34	50	94	270	454	695	1155	1475	2110	3266	-	-

Class 2500

Cast Carbon Steel Check Valve

ASME B16.34,

Pressure Seal Swing Disc Type

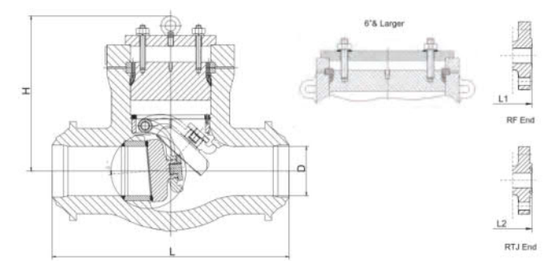

NPS	in	2"	2-1/2"	3"	4"	6"	8"	10"	12"	14"	16"	18"	20"	24"
DN	mm	50	65	80	100	150	200	250	300	350	400	450	500	600
L(BW)	in	11	13	14.5	18	24	30	36	41	41	41	49	50	60
	mm	279	330	368	457	610	762	914	1041	1041	1041	1245	1270	1525
L1(RF)	in	17.8	20	22.8	26.5	36	40.3	50	56	-	-	-	-	-
	mm	451	508	578	673	914	1022	1270	1422	-	-	-	-	-
L2(RTJ)	in	17.9	20.3	23	26.9	36.5	40.9	50.9	56.9	60.88	-	-	-	-
	mm	454	514	584	683	927	1038	1292	1445	1546	-	-	-	-
H	in	9.6	10.4	10.6	12.5	17.8	22	22.7	25.8	33.88	-	-	-	-
	mm	245	264	270	318	451	559	576	656	860	-	-	-	-
WT(RF)	KG	74	124	156	299	437	736	1718	2700	3350	-	-	-	-
WT(BW)	KG	30	74	89	142	298	540	820	1480	2450	-	-	-	-

WAFER CHECK VALVE

Design Feature

Class 150/300/600/900

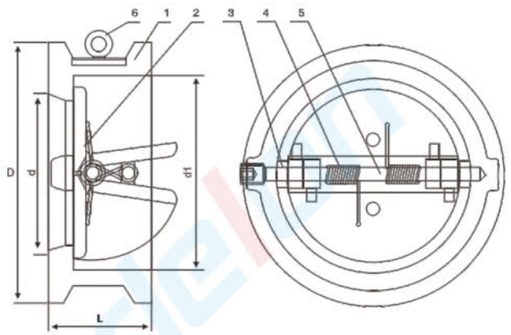

Materials of parts

NO	Part Name	ASTM Materials		
1	Body	A216-WCB	A351-CF8M	A352-LCB
2	Plate	A216-WCB+CR13	A351-CF8M+HF	A352-LCB+CR13
3	Stop Pin	A276-420	A276-304	A276-420
4	Back Spring	A313-304	A313-316	A313-304
5	Hinge Pin	A276-420	A276-304	A276-420
6	Eyebolt[2]	Carbon Steel		

Note: 1) NPS 8" & larger.

Applicable standards:

- STEEL CHECK VALVES, API 594/API6D
- STEEL CHECK VALVES, ISO14313
- STEEL VALVES, ASME B16.34
- FACE TO FACE, ASME B16.10
- END FLANGES, ASME B16.5
- INSPECTION AND TEST, API 598/API 6D

Design descriptions:

- ONE PIECE BODY
- BUTTERFLY SWING TYPE
- DUAL-PLATE DISC, LONG-PATTERN
- RENEWABLE SPLIT DISC
- HORIZONTAL OR VERTICAL SERVICE
- WAFER ENDS
- AVAILABLE WITH FLANGED ENDS

WAFER CHECK VALVE

Dimension

Class 150

NPS	in	2"	2-1/2"	3"	4"	6"	8"	10"	12"	14"	16"	18"	20"	24"
DN	mm	50	65	80	100	150	200	250	300	350	400	450	500	600
L	in	2.38	2.62	2.88	2.88	3.88	5.00	5.75	7.12	7.25	7.50	8.00	8.62	8.75
	mm	60	67	73	73	98	127	146	181	184	191	203	219	222
D	in	4.00	4.88	5.38	6.75	8.62	10.88	13.25	16.00	17.62	20.12	21.50	23.75	28.12
	mm	103	122	135	173	220	277	337	407	448	512	547	604	715
d	in	2.00	2.50	3.25	4.00	6.00	8.00	10.00	12.00	13.75	15.75	17.75	19.75	23.62
	mm	51	65	80	102	152	203	254	305	350	400	450	500	600
D1	in	2.25	2.88	3.50	4.25	6.25	8.25	10.50	12.12	14.00	16.00	18.00	19.88	23.75
	mm	56	73	88	108	160	210	266	310	355	405	455	505	605
WT	kg	2	3	4	6	13	25	39	54	80	117	138	163	331

Class 300

NPS	in	2"	2-1/2"	3"	4"	6"	8"	10"	12"	14"	16"	18"	20"	24"
DN	mm	50	65	80	100	150	200	250	300	350	400	450	500	600
L	in	2.38	2.62	2.88	2.88	3.88	5.00	5.75	7.12	8.75	9.12	10.38	11.50	12.50
	mm	60	67	73	73	98	127	146	181	222	232	264	292	318
D	in	4.25	5.00	5.75	7.00	9.88	12.00	14.12	16.50	19.00	21.12	23.38	25.62	30.38
	mm	110	128	147	179	249	305	359	420	483	537	594	652	772
d	in	2.00	2.50	3.00	4.00	6.00	8.00	10.00	12.00	14.00	16.00	18.00	20.00	24.00
	mm	51	65	80	102	152	8.25	254	305	350	400	450	500	600
D1	in	2.25	2.88	3.50	4.25	6.38	203	10.50	12.25	14.00	16.00	18.00	20.00	24.00
	mm	58	73	88	108	160	210	266	310	355	405	455	505	608
WT	kg	3	4	6	8	18	31	51	77	117	190	200	265	410

Class 600

NPS	in	2"	2-1/2"	3"	4"	6"	8"	10"	12"	14"	16"
DN	mm	50	65	80	100	150	200	250	300	350	400
L	in	2.38	2.62	2.88	3.12	5.38	6.50	8.38	9.00	10.75	12.00
	mm	60	67	73	79	137	165	213	229	273	305
D	in	4.38	5.00	5.75	7.50	10.38	12.50	15.62	17.88	19.25	22.12
	mm	110	128	147	191	264	318	398	455	490	562
d	in	2.00	2.50	3.00	4.00	6.00	7.88	9.88	12.00	13.25	15.25
	mm	51	65	80	102	152	200	250	305	337	387
D1	in	2.25	2.88	3.50	4.25	6.38	8.38	10.50	12.25	14.00	157.75
	mm	58	73	88	108	162	212	266	312	355	400
WT	kg	4	5	8	11	26	55	95	140	223	360

Class 900

NPS	in	2"	2-1/2"	3"	4"	6"	8"	10"	12"	14"	16"
DN	mm	50	65	80	100	150	200	250	300	350	400
L	in	2.75	3.25	3.25	4.00	6.25	8.12	9.50	11.50	-	-
	mm	70	83	83	102	159	206	241	292	-	-
D	in	5.50	6.38	6.50	8.00	11.25	14.00	17.00	19.50	-	-
	mm	140	162	165	204	286	356	432	495	-	-
d	in	2.00	2.50	3.00	4.00	6.00	7.88	9.88	12.00	-	-
	mm	51	62	80	102	152	200	250	305	-	-
D1	in	2.25	2.88	3.50	4.25	6.38	8.38	10.50	12.25	-	-
	mm	58	73	88	108	162	212	266	312	-	-
WT	kg	8	11	14	20	42	84	145	220	-	-

FORGED STEEL CHECK VALVE

Design Feature

Class 150/300/600/800/900/1500

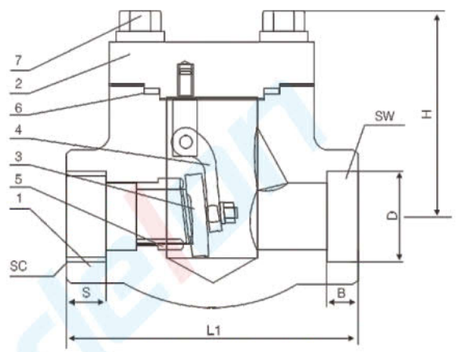

Materials of parts

NO	Part Name	ASTM Materials		
1	Body	A105	A182-F316	A182-F11
2	Cover	A105	A182-F316	A182-F11
3	Disc	A182-F6a	A182-F316	A182-F6A+HF
4	Hinge	A276-410	A276-316	A276-410
5	Seat	A276-410	A182-F316	A276-410+HF
6	Gasket	Graphite+304	Graphite+316	Graphite+304
7	Stud	A193-B7	A193-B8M	A193-B16

Note: 1) lift type check valve seat ring integral with body
2) spiral wound construction.

Applicable standards:

- STEEL CHECK VALVES, API 602
- STEEL VALVES ASME B16.34
- FACE TO FACE MANUFACTURER STANDARD
- FACE TO FACE, FLANGED ASME B16.10
- END FLANGES ASME B16.5
- BUTTWELDING ENDS ASME B16.25
- SOCKET-WELDING ENDS ASME B16.11
- SCREWED ENDS ASME B1.20.1
- INSPECTION AND TEST, API 598

Design descriptions:

- BOLTED COVER
- CHOICE OF WB, WELDED COVER
- SEAT RINGS TYPE
- SEAT RINGS INTEGRAL WITH BODY OF LIFT
- HORIZONTAL OR VERTICAL SERVICE
- SW, SOCKET-WELDING ENDS
- SC, SCREWED ENDS
- BW, BUTTWELDING ENDS
- FLANGED ENDS

FORGED STEEL CHECK VALVE

Dimension

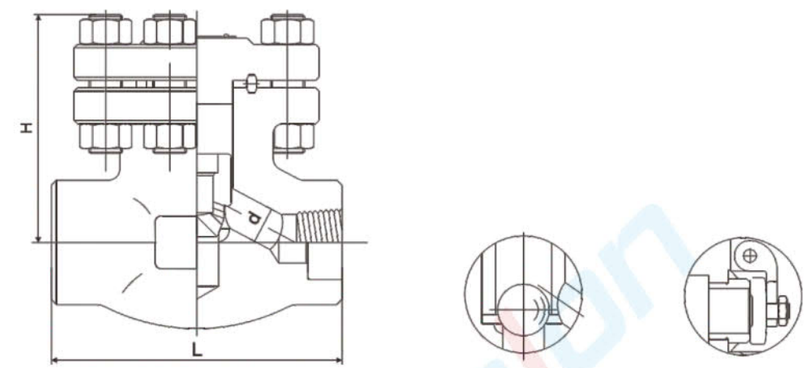

Dimensional data

NPS DN	Unit	L1[1]	L(Flanged Ends)			d	SW		SC		H	WT[2](kg)
			150#	300#	600#		D	B	NPT	S		
3/8	in	3.12	4.00	6.00	6.50	0.354	0.693	0.378	3/8	0.540	2.40	3.8/2.8
10	mm	79	102	152	165	9	17.6	9.6		13.6	61	
1/2	in	3.12	4.25	6.00	6.50	0.354	0.858	0.378	1/2	0.535	2.40	5.6/3.4
15	mm	79	108	152	165	9	21.8	9.6		13.6	61	
3/4	in	3.62	4.62	7.00	7.50	0.512	1.067	0.500	3/4	0.547	2.40	7.8/4.7
20	mm	92	117	178	190	13	27.1	12.7		13.9	61	
1	in	4.38	5.00	8.00	8.50	0.689	1.331	0.500	1	0.681	3.07	12.5/9.2
25	mm	111	127	203	216	17.5	33.8	12.7		17.3	78	
1¼	in	4.75	5.50	8.50	9.00	0.906	1.677	0.500	1¼	0.709	3.31	17/10.5
32	mm	120	140	216	229	23	42.6	12.7		18	84	
1½	in	4.75	6.50	9.00	9.50	1.142	1.917	0.500	1½	0.724	10.25	23.5/13.3
40	mm	120	165	229	241	30	48.7	12.7		18.4	3.98	
2	in	5.50	8.00	10.50	11.50	1.378	2.406	0.626	2	0.756	4.72	38.8/18.9
50	mm	140	203	267	292	35	61.1	15.9		19.2	120	

Notes: 1)BW, SW or SC.
2)600#-RF/800#-(BW/SW/SC).

Dimensional data

NPS	1/4	3/8	1/2	3/4	1	1¼	1½	2	in
L	110	110	110	110	150	150	210	235	in
H	166	166	171	207	240	258	330	355	in
d	9	10	12	15	20	28	32	40	in
	8	10.5	13.5	18	24	29	36.5	45	in
Weight(kg)	2	2.1	1.9	4	5.1	7.2	12.1	14	in
	1.9	2.3	2.3	4.35	5.25	7.8	12.5	14.6	in

Y STRAINER

Design Feature

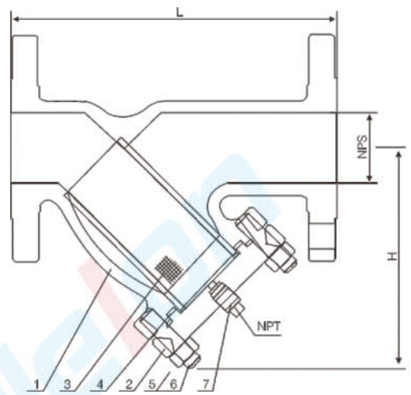

Materials of parts

NO	Part Name	ASTM Materials		
1	Body	A216-WCB	A351-CF8M	A352-LCB
2	Bonnet Cap	A216-WCB	A351-CF8M	A352-LCB
3	Screen	A240-304	A240-316	A240-304
4	Bonnet Gasket	Graphite +304	PTFE	Graphite+304
5	Bonnet Stud	A193-B7	A193-B8	A320-L7
6	Bonnet Stud Nut	A194-2H	A194-8	A194-7
7	Drain Plug	A276-410	A276-316	A276-410

Applicable standards:

- STEEL STRAINER, ASME B16.34
- FACE TO FACE ASME B16.10
- END FLANGES ASME B16.5
- BUTT WELDING ENDS ASME B16.25
- INSPECTION AND TEST, API 598

Design descriptions:

- Y-PATTERN TYPE
- BOLTED BONNET CAP WITH DRAIN PLUG
- PERFORATED STAINLESS STEEL SCREEN
- STRAINER DENSITY 100 MESH DESIGN
- FULL RANGE OF STRAINER DENSITY
- RENEWABLE STRAINER DENSITY
- FLANGED OR BUTT WELDING ENDS

Y STRAINER

Dimension

Even the mesh is the same,
open area is not always the same
due to the diameter of wire.
The details of wire are as follows:

A: Number of Wire
B: Diameter of Wire
C: Width of Opening
D: Percentage of OPEN AREA

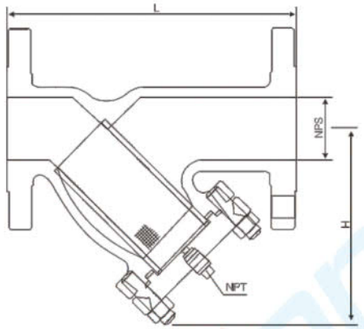

Percentage of open area

MESH	A SWG	B m/m	C m/m	D %
5	20	0.914	4.166	67.3
10	22	0.711	1.829	51.8
20	28	0.356	0.914	51.8
30	32	0.274	0.572	45.7
40	36	0.193	0.442	48.4
50	37	0.172	0.336	43.6
60	38	0.152	0.271	41.0
80	40	0.122	0.195	37.8
100	42	0.102	0.152	35.8
120	43	0.092	0.119	31.8
150	45 1/2	0.066	0.103	37.1
180	46 1/2	0.053	0.088	38.9
200	47	0.051	0.076	35.8
250	48	0.040	0.062	37.7
300	48	0.039	0.044	27.6

Dimensional data

NPS	DN	L/L1 (RF/BW)		H		PLUG (NPT)	WT (KG)		L/L1 (RF/BW)		H		PLUG (NPT)	WT (KG)	
		Class 150							Class 300						
1/2	15	5.50	140	3.38	87	1/8	2.1	0.8	5.50	140	3.38	87	1/8	2.5	1.2
3/4	20	6.00	152	4.12	105	1/2	2.3	1.2	6.00	152	4.12	105	1/2	3.4	1.8
1	25	6.50	165	4.50	114	1/2	3.1	1.4	6.50	165	4.50	114	1/2	4.2	2.6
1 1/2	40	8.00	203	6.12	156	1/2	6.2	3.7	8.00	203	6.12	156	1/2	8.6	4.8
2	50	9.00	229	7.12	181	1/2	9.7	6.7	9.00	229	7.12	181	1/2	11.12	8.2
2 1/2	65	11.00	279	10.25	259	3/4	23.5	16.5	11.00	279	10.25	259	3/4	29	20
3	80	12.50	318	11.50	293	3/4	28	22	12.50	318	11.50	293	3/4	38	27
4	100	14.50	368	12.75	324	3/4	37	28	14.50	368	12.75	324	3/4	57	39
6	150	18.50	470	17.62	448	3/4	67	59	18.50	470	17.62	448	3/4	105	74
8	200	23.50	597	21.00	535	3/4	91	78	23.50	597	21.00	535	3/4	176	131
10	250	26.50	673	27.12	690	1	135	113	26.50	673	27.12	690	1	230	164
12	300	30.50	775	30.75	780	1	168	151	30.50	775	30.75	780	1	360	268
in	mm	in	mm	in	mm	in	RF	BW	in	mm	in	mm	in	RF	BW