Sedelon

Sedelon Valve Co., Ltd

Address: Baoyi Industry Zone, Oubei, Wenzhou, Zhejiang, China
Tel: +86-577-67926789 +86-577-67927781
Fax: +86-577-67927789
E-mail: sales@sedelon.com
www.sedelon.com

Sedelon

Plug Valve
Butterfly Valve

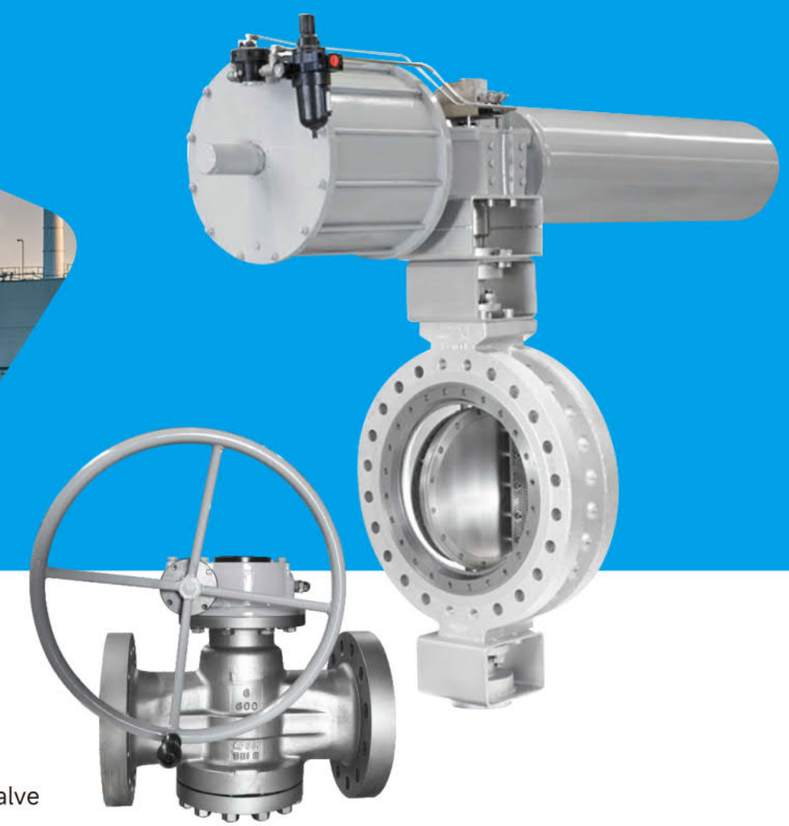

- PTFE Sleeve Soft Seat Plug Valve
- Pressure Balanced Plug Valve
- Metal Seat Triple Offset Butterfly Valve
- Soft Seat Concentric Butterfly Valve
- Butt Welded Butterfly Valve
- Double Eccentric High Performance Butterfly Valve

www.sedelon.com

Company Profile

SEDELON is an American-based, dynamic valve manufacturer and major supplier in the global valve market for the most diverse types of applications in oil and gas, petrochemical, marine and thermal power industries. SEDELON is a team of competent and experienced professionals, fuelled by whom, the company emerged as one of the most cost-effective global manufacturer.

SEDELON's high-quality products, market know-how and state-of-the-art production facilities accredit us as a reliable and professional partner and agent to the needs of clients. As a specialist in the design and manufacture of industrial valves, we present a full range of valve types from 1/2" to 48" and pressure rating from 150LB to 2500LB. SEDELON products are also suitable for ultrahigh and ultralow temperature conditions and function well even in severe environment. Our broad product line can meet demanding requirements and is synonymous with high quality, innovation and reliability.

Sedelon

Quality Assurance

SEDELON is certified by API 600, API 6D, API 607, API 6FA, API 624, CE, ISO 9001, ISO 45001, ISO 14001, ISO 15848-1, etc. All activities are performed under the highest international standards to ensure the quality, safety and reliability of products' excellent service.

The company operates in conformity with the QMS (Quality Management System) in which every step is set aims to achieve the overall goal of meeting and satisfying customers' requirements.

Adhere to the standard of QMS, ITP (Inspection and Test Plan) is a checklist to assure products quality at every critical point. ITP is conducted by the quality manager and operated by qualified inspectors.

API
API 6D-2077
API 600-0399

Q1
API Q1-4885

API-ISO
ISO 9001-5148

ISO
ISO 9001
ISO 14001
ISO 45001

CE
CE-2435

TÜV SÜD
API 624
API 6FA
API 607
ISO 15848-1

SGS

ABS

Sedelon

SEDELON managers at all levels and all employees observe the QMS. The management periodically review and continuously improve the effectiveness of the QMS. Vendor evaluation and calibration of various aspects is conducted regularly. Necessary and suitable resources is provided for the implementation and improvement of the QMS.

The significance of quality of both products and service is taken into account by SEDELON at all times. The satisfaction of esteemed customers is achieved through high quality products and comprehensive service as well as the commitment to meet their requirements. Applicable and achievable objectives and targets are set for all processes and activities relevant to quality and customer satisfaction.

www.sedelon.com

Product Warranty

Within eighteen months of completion inspection or within twelve months of the start of usage, whichever is shortest, SEDELON valve will repair or replace products or the faulty components of products free of charge in the event of failure under normal usage attributable to inadequate design or manufacturing on the part of SEDELON valve. However, repairs or replacements will be charged in any of the following cases. Also note that if a separate agreement is in effect, that agreement shall take precedence.

(1) When the product has been used in an incorrect manner which deviates from the catalog or instruction manual;

(2) When the product failure is due to careless handling such as jamming with foreign substances or the sticking of excessive water stain;

(3) When the product has been disassembled, repaired or altered by a third party other than SEDELON;

(4) When the product has been subject to cases beyond the control of valve including natural disaster such as wind or flood damage, earthquakes and electrical storm, fire, pollution (special environments), salt damage, war or acts of terror;

(5) When a failure is due to any other factor deemed to be the responsibility of SEDELON valve.

PTFE SLEEVE SOFT SEAT PLUG VALVE

Design feature

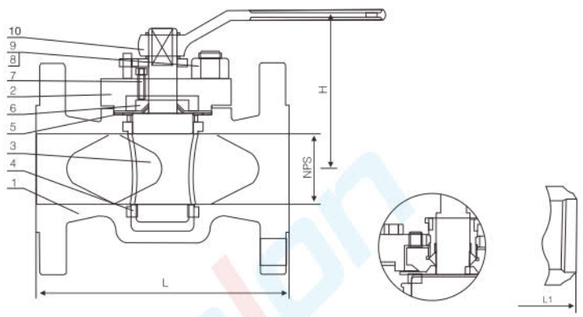

Materials of parts

No	Part Name	ASTM Materials				
1	Body	A216–WCB	A351–CF8M	A352–LCB	A351 CN7M	A890 4A
2	Bonnet	A216–WCB	A351–CF8M	A352–LCB	A351 CN7M	A890 4A
3	Plug	A182–F304 1)	A182–F316	A182–F304 1)	A351 CN7M	A890 4A
4	Sleeve	Glass Filled PTFE				
5	Bonnet Gasket	Graphite+304 2)	Graphite+316 2)	Graphite+304 2)	Graphite+316 2)	Graphite+316 2)
6	Adjusting Gasket	A182–F6a	A182–F316	A182–F6a	Alloy 20	A182 F51
7	Adjusting Bolt	A193–B7	A193 –B8M	A320–L7	A193 –B8M	A193 –B8M
8	Bonnet Stud	A193–B7	A193 –B8M	A320–L7	A193 –B8M	A193 –B8M
9	Bonnet Bolt	A194–2H	A194 –8M	A194–4	A194 –8M	A194 –8M
10	Wrench	Carbon Steel				
11	Diaphragm	304+PTFE	316+PTFE	304+PTFE	316+PTFE	316+PTFE
12	Packing	Graphite				
13	Gland Flange	A216–WCB	A351-CF8M	A352–LCB	A351 CN7M	A890 4A

Note:1)A105+ENP optional
2)Jacketed construction

Applicable Standards:

- STEEL PLUG VALVES: API 599, API 6D
- STEEL PLUG VALVES: ISO 14313
- FIRE SAFE: API 607
- ANTI STATICS: API 599
- STEEL VALVES: ASME B16.34
- FACE TO FACE: ASME B16.10
- END FLANGES: ASME B16.5
- BUTT WELDING ENDS: ASME B16.25
- INSPECTION AND TEST: API 598, API 6D

Design descriptions:

- RUGGED, HEAVY-DUTY BODY
- BOLTED BONNET CAP
- PTFE SLEEVED, TAPERED PLUG
- LARGE PORT OPENINGS
- NON-LUBRICATED
- STEM INTEGRAL WITH PLUG
- IN-LINE ADJUSTMENT
- FIRE SAFE CONSTRUCTION
- ANTI STATICS DEVICE
- STOPPER DEVICE
- RENEWABLE SEAT RING
- FLANGED OR BUTT WELDING ENDS
- AVAILABLE WITH WG OPERATOR

PTFE SLEEVE SOFT SEAT PLUG VALVE

Dimension

Class 150/300/600/900

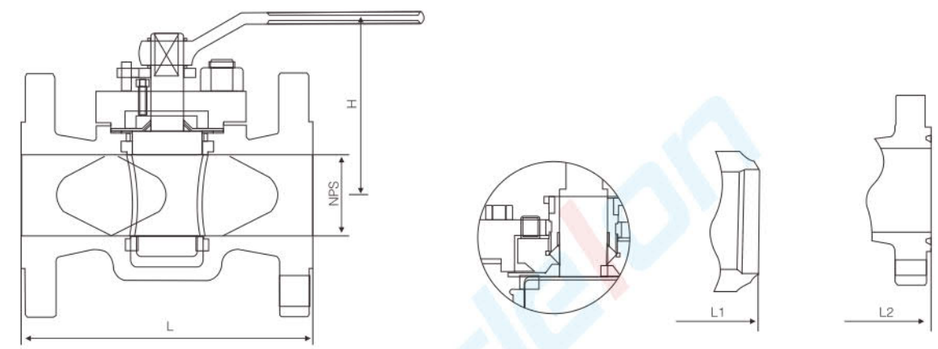

Dimensional data

NPS	DN	L (RF)		L1 (BW)		H		W		WT(kg)		L (RF)		L1 (BW)		H		W		WT(kg)	
		ANSI Class150										ANSI Class300									
2	50	7.00	178	10.50	267	6.00	150	13	320	17	13	8.5	216	10.50	267	6.00	150	13	320	17	13
2 1/2	65	7.50	191	12.00	305	6.50	165	14	350	20	14	9.5	241	12.00	305	6.50	165	14	350	20	14
3	80	8.00	203	13.00	330	7.12	180	16	410	25	17.5	11.0	283	13.00	330	7.12	180	16	410	25	17.5
4	100	9.00	229	14.00	356	15.00	380	13	320	40	29	12.0	305	14.00	356	15.00	380	13	320	40	29
6	150	10.50	267	18.00	457	20.50	520	13	320	70	55	16.0	403	18.00	457	20.50	520	13	320	70	55
8	200	11.50	292	20.50	521	22.88	580	13	320	135	110	16.5	419	20.50	521	22.88	580	13	320	135	110
10	250	13.00	330	22.00	559	24.50	620	14	350	220	182	18.0	457	22.00	559	24.50	620	14	350	220	182
12	300	14.00	356	25.00	635	26.75	680	15	380	300	247	20.0	502	25.00	635	26.75	680	15	380	300	247
in	mm	in	mm	in	mm	in	mm	in	mm	RF	BW	in	mm	in	mm	in	mm	in	mm	RF	BW

Dimensional data

NPS	DN	L (RF)		L1 (BW)		H		W		WT(kg)		L (RF)		L1 (BW)		H		W		WT(kg)	
		ANSI Class600										ANSI Class900									
2	50	11.50	292	11.62	295	6.12	155	14	350	28	21	14.50	368	14.62	371	6.12	155	14	350	52	32
2 1/2	65	13.00	330	13.12	333	6.75	170	16	410	33	23.5	16.50	419	16.62	422	6.75	170	16	410	60	34
3	80	14.00	356	14.12	359	7.25	185	13	320	387	23	15.00	381	15.12	384	7.25	185	13	320	70	47
4	100	16.00	432	16.12	435	15.38	390	13	320	75	46	18.00	457	18.12	460	15.38	390	13	320	92	55
6	150	19.50	559	19.62	562	20.88	530	13	320	142	97	24.00	610	24.12	613	20.88	530	13	320	195	120
8	200	23.50	660	23.62	664	23.25	590	14	350	250	167	29.00	737	29.12	740	23.25	590	14	350	320	197
10	250	26.50	787	26.62	791	24.88	630	15	350	365	227	33.00	838	33.12	841	24.88	630	15	380	455	277
12	300	30.00	838	30.12	841	27.12	690	15	380	515	354	38.00	965	38.12	968	27.12	690	15	380	625	405
in	mm	in	mm	in	mm	in	mm	in	mm	RF/RTJ	BW	in	mm	in	mm	in	mm	in	mm	RF/RTJ	BW

PRESSURE BALANCED PLUG VALVE

Design feature

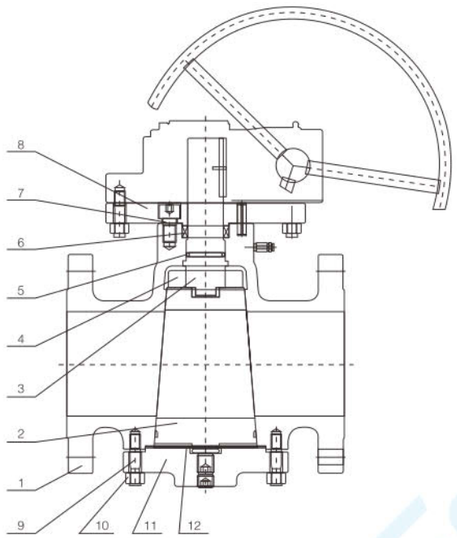

Name of parts

No	Part Name	No	Part Name
1	Body	7	Bolt
2	Plug	8	ISO Flange
3	Stem	9	Stud
4	Driving dog	10	Nut
5	O–ring	11	Bottom cover
6	Packing	12	Gasket

Materials of parts

Body	WCB/LCB/CF8M/CF8/CF3M/CF3/WC6/WC9/CD3MN
Plug	WCB+N/CA15/4140+ENP/CF8M/CF8/CF3M/CF3/CD3MN
Stem	F6a/4140+ENP/F304/F316/F304L/F316L/F51
Bottom cover	A105/LF2/F304/F316/F304L/F316L/F51
O–ring	VITON/NBR
Stud	B7M/B8M/L7M/B16M
Nut	2HM/8M/7M/4M
Gasket	Flexible graphite+304/PTFE/304

Materials could be choosed according to customers' requirement & working condition.

Applicable Standards:

- DESIGN & MANUFACTURE: API 599, API 6D, ISO 14313, ASME B16.34
- CONNECTION DIMENSION: ASME B16.5, DIN EN 1092
- FIRE RESISTANCE DESIGN: API 607, ISO 10497
- INSPECTION & TEST: API 598、API 6D, ISO 5208
- MATERIAL: ISO 15156

PRESSURE BALANCED PLUG VALVE

Dimension

Class 150/300

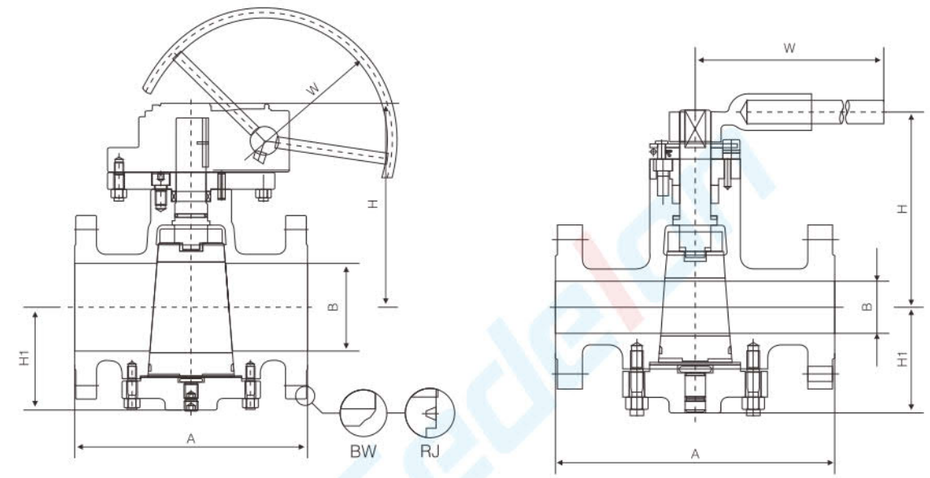

Dimensional data

NPS inch	DN	A mm	B mm	H mm	H1 mm	W mm	M(RF) kg	T N.m	NPS inch	DN	A mm	B mm	H mm	H1 mm	W mm	M(RF) kg	T N.m
Short Series Type ANSI Class 150									**Venturi Type ANSI Class 150**								
2	50	178	51	175	106	350	18	98	★10	250	533	252	420	255	600	375	2166
3	80	203	76	190	127	600	31	180	★12	300	610	303	492	316	600	420	3199
4	100	229	102	214	158	700	50	302	★14	350	686	334	498	320	600	480	4849
★6	150	267	152	270	185	900	93	628	★16	400	762	385	645	368	700	590	6032
★8	200	292	201	370	220	600	250	2032	★18	450	864	436	687	426	760	713	9142
★10	250	330	252	420	250	600	330	2166	★20	500	914	487	742	477	760	880	12022
★12	300	356	303	490	310	600	360	3199	★24	600	1067	589	798	522	760	1203	19424

Dimensional data

NPS inch	DN	A mm	B mm	H mm	H1 mm	W mm	M(RF) kg	T N.m	NPS inch	DN	A mm	B mm	H mm	H1 mm	W mm	M(RF) kg	T N.m
Short Series Type ANSI Class 300									**Venturi Type ANSI Class 300**								
2	50	216	51	184	108	500	25	172	6	150	403	152	307	200	900	144	1080
2½	70	241	62	190	115	550	33	198	★8	200	419	303	390	230	600	280	3208
3	80	283	76	195	137	600	40	218	★10	250	457	252	433	255	600	370	3258
4	100	305	102	265	168	700	70	536	★12	300	502	303	500	320	700	408	5202
★6	150	403	152	307	200	900	144	1080	★14	350	762	334	630	340	700	510	8486
★8	200	419	201	390	230	600	280	3208	★16	400	838	385	740	376	762	630	10696
★10	250	457	252	433	255	600	370	3258	★18	450	914	436	788	436	762	750	15940
★12	300	502	303	500	320	700	408	5202	★20	500	991	487	833	497	762	890	21040
									★24	600	1143	589	889	543	762	1035	24082

Note: ★Turbine drives

PRESSURE BALANCED PLUG VALVE

Dimension

Class 600/900/1500

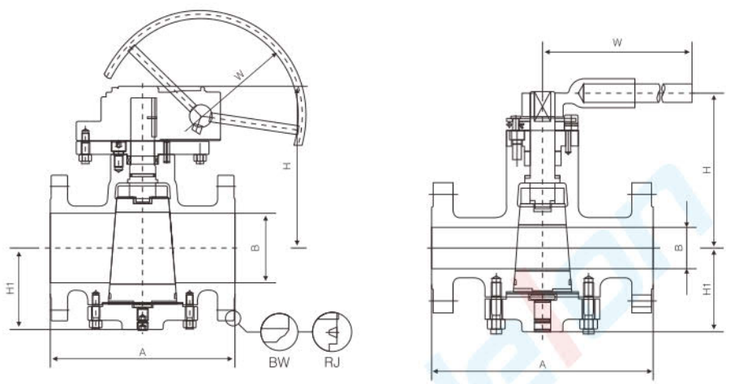

Dimensional data

NPS inch	DN	A mm	B mm	H mm	H1 mm	W mm	M(RF) kg	T N.m	NPS inch	DN	A mm	B mm	H mm	H1 mm	W mm	M(RF) kg	T N.m
Reduced Bore Type ANSI Class 600									Venturi Type ANSI Class 600								
2	50	292	51	194	108	500	30	292	6	150	403	152	307	200	900	144	1080
2½	65	330	62	200	115	550	40	322	★8	200	419	303	390	230	600	280	3208
3	80	356	76	205	137	780	48	380	★10	250	457	252	433	255	600	370	3258
4	100	432	102	270	168	1100	85	918	★12	300	502	303	500	320	700	408	5202
★6	150	559	152	340	200	600	194	1814	★14	350	762	334	630	340	700	510	8486
★8	200	660	201	405	230	600	305	5114	★16	400	838	385	740	376	762	630	10696
★10	250	787	252	460	255	700	625	6088	★18	450	914	436	788	436	762	750	15940
									★20	500	991	487	833	497	762	890	21040
									★24	600	1143	589	889	543	762	1035	24082

Dimensional data

NPS inch	DN	A mm	B mm	H mm	H1 mm	W mm	M(RF) kg	T N.m	NPS inch	DN	A mm	B mm	H mm	H1 mm	W mm	M(RF) kg	T N.m
Reduced Bore Type ANSI Class 900									Venturi Type ANSI Class 900								
2	50	368	51	215	120	700	50	417	★6	150	610	152	365	210	600	240	2548
3	80	381	76	250	145	800	70	540	★8	200	737	201	405	240	600	410	7022
4	100	457	102	300	180	1100	116	1258	★10	250	838	252	460	265	762	860	8516
★6	150	610	152	365	210	600	240	2548	★12	300	965	303	510	335	762	1150	11986
★8	200	737	201	405	240	700	410	7022	★16	400	1130	373	600	390	762	1960	20326
★10	250	838	252	460	265	762	860	8516									

Dimensional data

NPS inch	DN	A mm	B mm	H mm	H1 mm	W mm	M(RF) kg	T N.m	NPS inch	DN	A mm	B mm	H mm	H1 mm	W mm	M(RF) kg	T N.m
Reduced Bore Type ANSI Class 1500									Venturi Type ANSI Class 1500								
2	50	368	51	215	120	700	50	654	★6	150	705	144	390	220	600	325	4022
3	80	470	76	60	150	1000	88	862	★8	200	832	192	415	260	762	520	10848
4	100	546	102	320	185	600	160	2064	★10	250	911	239	480	280	762	970	13388
★6	150	705	144	390	220	600	325	4022	★12	300	1130	287	540	360	762	1450	18792
★8	200	832	192	415	260	762	520	10848									

Note: ★Turbine drives

METAL SEAT TRIPLE OFFSET BUTTERFLY VALVE

Design Feature

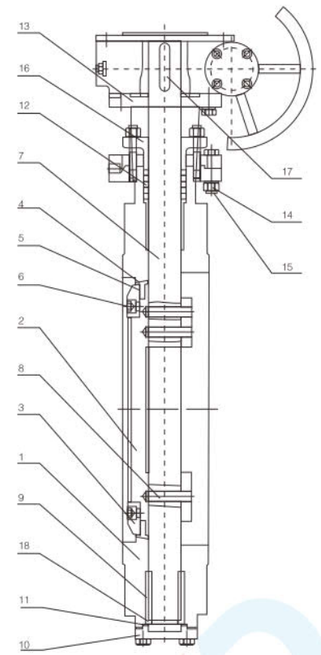

Materials of parts

Body	WCB/LCB/CF8M/CF8/CF3M/CF3/WC6/WC9/CD3MN/C95800
Disc	WCB+ENP/LCB/CF8M/CF8/CF3M/CF3/WC6/WC9/CD3MN/C95800
Seat	STL/13Cr/316/316L/304/304L/F316L/Monel/F51
Stem	F6a/17-4PH/F304/F316/F304L/F316L/F51/Monel
Ring	304+Flexible graphite/316+Flexible graphite/PTFE+SS/SS+STL
Bolt	B7/B7M/B8M/L7M/B16M
Nut	2H/2HM/8M/7M/4M
Bushing sleeve	C95200/C95500/PTFE+Bronze/SS+Nitride
Gasket	Flexible graphite+304/Flexible graphite+316
Packing	Flexible graphite

Materials could be choosed according to customers' requirement & working condition.

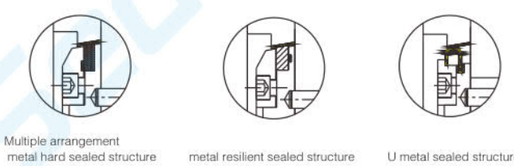

Multiple arrangement metal hard sealed structure | metal resilient sealed structure | U metal sealed structure

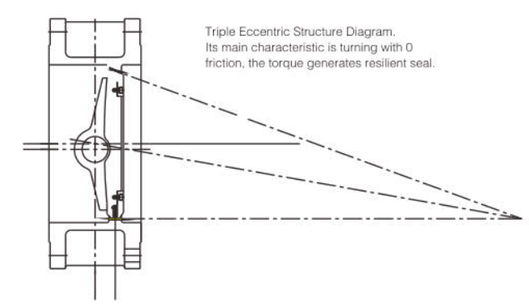

Triple Eccentric Structure Diagram.
Its main characteristic is turning with 0 friction, the torque generates resilient seal.

Applicable Standards:

- DESIGN& MANUFACTURE: API609, ASME B16.34
- CONNECTION DIMENSION: ASME B16.5, ASME B16.47
- FACE-TO-FACE : API609, MSS SP-67, ISO 5752, ASME B16.10
- INSPECTION & TEST: ISO 5208, API 598

METAL SEAT TRIPLE OFFSET BUTTERFLY VALVE

Dimension

Class 150/300/600

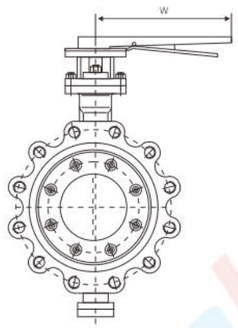

Lug type

Lug type

Dimensional data

NPS inch	DN	L mm	L1 mm	H1 mm	H mm	W mm	MT kg	T N.m	NPS inch	DN	L mm	L1 mm	H1 mm	H mm	W mm	MT kg	T N.m
ANSI Class 150																	
2	50	43	108	112	225	220	10	55	★16	400	102	216	352	540	600	160	4128
3	80	48	114	126	255	270	12	226	★18	450	114	222	386	585	600	200	5511
4	100	54	127	146	285	270	16	325	★20	500	127	229	415	642	600	270	7190
★6	150	57	140	170	332	360	25	615	★24	600	154	267	482	693	600	420	7814
★8	200	64	152	218	386	300	36	902	★30	750	165	318	622	868	600	700	16450
★10	250	71	165	245	427	300	60	1278	★36	900	200	330	673	1000	700	1050	23501
★12	300	81	178	290	498	500	80	2628	★42	1050	251	410	755	1058	700	1500	31963
★14		92	190	316	510	500	120	3276	★48	1200	276	470	866	1278	700	1845	47000

Dimensional data

NPS inch	DN	L mm	L1 mm	H1 mm	H mm	W mm	MT kg	T N.m	NPS inch	DN	L mm	L1 mm	H1 mm	H mm	W mm	MT kg	T N.m
ANSI Class 300																	
–	50	–	–	–	–	–	–	–	★16	400	133	216	392	582	600	185	8152
3	80	48	114	130	265	270	15	352	★18	450	149	222	420	651	600	230	10223
4	100	54	127	150	290	270	19	514	★20	500	159	229	465	704	600	330	13469
★6	150	59	140	185	355	300	35	1073	★24	600	181	267	532	780	600	460	22827
★8	200	73	152	236	418	500	42	1954	★30	750	–	318	642	908	700	1280	39726
★10	250	83	165	273	456	500	68	2453	★36	900	–	330	703	1108	700	2150	63452
★12	300	92	178	313	498	600	88	3260	★42	1050	–	410	785	1258	700	3150	85326
★14		117	190	338	547	600	144	5405	★48	1200	–	470	906	1478	1000	4885	126742

Dimensional data

NPS inch	DN	L mm	L1 mm	H1 mm	H mm	W mm	MT kg	T N.m	NPS inch	DN	L mm	L1 mm	H1 mm	H mm	W mm	MT kg	T N.m
ANSI Class 600																	
–	–	–	–	–	–	–	–	–	★12	300	140	270	378	690	600	398	14236
3	80	54	180	152	305	270	38	575	★14	350	155	290	412	715	600	535	16947
4	100	64	190	193	338	360	58	1043	★16	400	178	310	450	823	600	780	20473
★6	150	78	210	248	416	500	120	3673	★18	450	200	330	512	897	600	898	25218
★8	200	102	230	295	490	600	154	4520	★20	500	216	350	563	1094	700	1266	31861
★10	250	117	250	342	580	600	297	7061	★24	600	232	390	622	1186	700	1622	46095

SOFT SEAT CONCENTRIC BUTTERFLY VALVE

Design feature

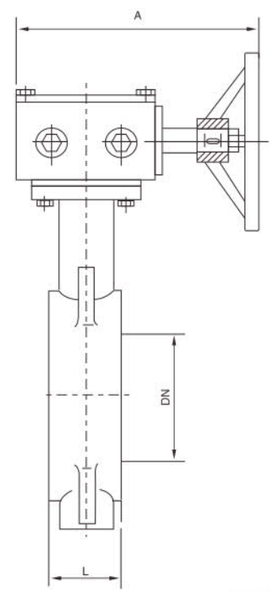

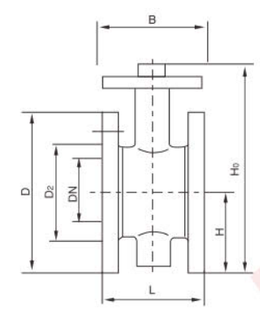

Usage & Features:

Soft sealed butterfly valve is applicable to the drain and air pipelines in the field of foodstuff,pharmacy,chemical industry, petroleum,power,textile,paper making with temperature≤120℃, PN≤1.6MPa, as to control flow and stop the medium.Main features detail as below:

1.Novelty and reasonable design,unique structure,light weight,prompt open/closure.
2.Small torque,convenient operation,flexible and labor saving.
3.It is available to install at all direction with convenient maintenance.
4.With changeable seal parts,the sealing performance gains zero leakage at bi-directional sealing.
5.Sealing materials have the advantages of anti-aging,corrosion resistant,long duration,etc.

Materials of parts

Body	Cast iron, Stainless steel, Cr-Mo steel, Alloy steel, Ductil Iron, Carbon steel
Disc	Cast steel, Alloy steel, Stainless steel, Cr-Mo steel, Bronze
Seats	NBR, EPDM, PTFE, etc.
Stem	2Cr13, 1Cr13 Stainless steel, Cr-Mo steel, Monel, Bronze
Packing	Flexible graphite
Materials can be alterd according to the customers' requirement and valves' performances.	

Applicable Standards:

- DESIGN STANDARD: API 609
- FLANGE CONNECTION DIMENSION: ASME B16.1, B16.5, B16.34, BS 4504
- FACE-TO-FACE: API 609
- PRESSURE TEST: API 598, ISO 5208

SOFT SEAT CONCENTRIC BUTTERFLY VALVE

Dimension

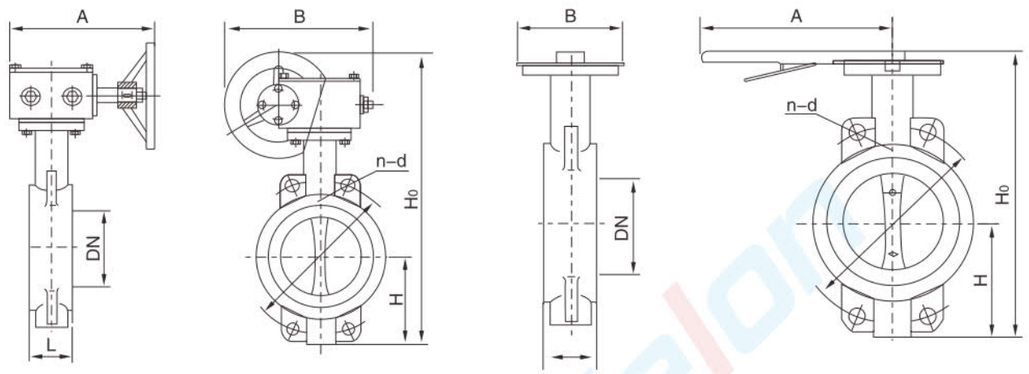

Dimension data

NPS inch	DN	L mm	H mm	H0 mm	A mm	B mm	0.6MPa D1 mm	0.6MPa n–d mm	1.0MPa D1 mm	1.0MPa n–d mm	1.6MPa D1 mm	1.6MPa n–d mm
2	50	43	63	306	180	200	110	4–14	125	4–18	125	4–18
2 1/2	65	46	70	321	180	200	130	4–14	145	4–18	145	4–18
3	80	46	83	346	180	200	150	4–18	160	8–18	160	8–18
4	100	52	105	387	180	200	170	4–18	180	8–18	180	8–18
5	125	56	115	411	180	200	200	8–18	210	8–18	210	8–18
6	150	56	137	447	270	280	225	8–18	240	8–22	240	8–22
8	200	60	164	572	270	280	280	8–18	295	8–22	295	12–22
10	250	68	206	646	270	280	335	12–18	350	12–22	355	12–26
12	300	78	230	738	380	420	395	12–22	400	12–22	410	12–26
14	350	78	248	761	380	420	445	12–22	460	16–22	470	16–26
16	400	102	289	877	450	470	495	16–22	515	16–26	525	16–30
18	450	114	320	938	480	490	550	16–22	565	20–26	585	20–30
20	500	127	343	993	480	490	600	20–22	620	20–26	650	20–33
24	600	154	413	1131	480	490	705	20–26	725	20–30	770	20–36
28	700	165	178	1476	640	660	810	24–26	840	24–30	840	24–36
32	800	190	525	1533	640	660	920	24–30	950	24–33	950	24–39
36	900	203	585	1655	750	860	1020	24–30	1050	28–33	1050	28–39
40	1000	216	640	1765	850	900	1120	28–30	1160	28–36	1170	28–42
48	1200	254	755	1995	850	900	1340	32–33	1380	32–39	1390	32–48
56	1400	279	910	2310	1000	925	1560	36–36	1590	36–42	1590	36–48
64	1600	318	1030	2595	1000	925	1760	40–36	1820	40–48	1820	40–56
72	1800	356	1140	2810	1100	980	1970	44–39	2020	44–48	2020	44–56
80	2000	406	1250	3100	1100	980	2180	48–42	2230	48–48	2230	48–60

SOFT SEAT CONCENTRIC BUTTERFLY VALVE

Dimension

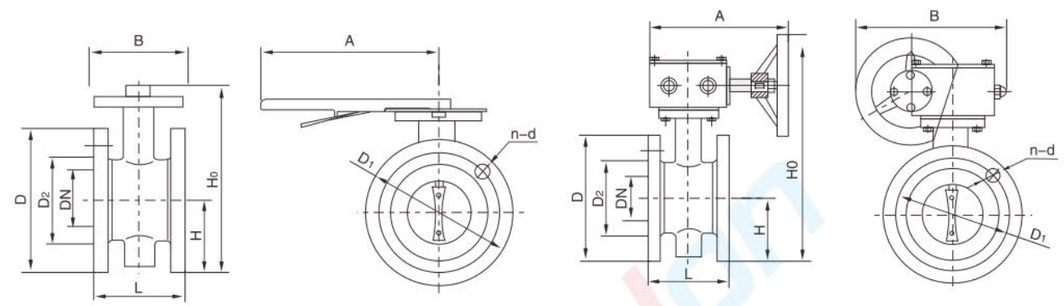

Dimension data

NPS inch	DN	L mm	H mm	H0 mm	A mm	B mm	0.6MPa D mm	0.6MPa D1 mm	0.6MPa D2 mm	0.6MPa n–d mm	1.0MPa D mm	1.0MPa D1 mm	1.0MPa D2 mm	1.0MPa n–d mm	1.6MPa D mm	1.6MPa D1 mm	1.6MPa D2 mm	1.6MPa n–d mm	Reference Weight
2	50	108	63	306	180	200	140	110	88	4–14	165	125	99	4–18	165	125	99	4–18	13
2 1/2	65	112	70	321	180	200	160	130	108	4–14	185	145	118	4–18	185	145	118	4–18	14
3	80	114	83	346	180	200	190	150	124	4–18	200	160	132	8–18	200	160	132	8–18	15.5
4	100	127	105	387	180	200	210	170	144	4–18	220	180	156	8–18	220	180	156	8–18	19.5
5	125	140	115	411	180	200	240	200	174	8–18	250	210	184	8–18	250	210	184	8–18	25.5
6	150	140	137	447	270	280	265	225	199	8–18	285	240	211	8–22	285	240	211	8–22	28.5
8	200	152	164	572	270	280	320	280	254	8–18	340	295	266	8–22	340	295	266	12–22	48
10	250	165	206	646	270	280	375	335	309	12–18	395	350	319	12–22	405	350	319	12–26	69
12	300	178	230	738	380	420	440	395	363	12–22	445	400	370	12–22	460	400	370	12–26	91
14	350	190	248	761	380	420	490	445	413	12–22	505	460	429	16–22	520	460	429	16–26	110
16	400	216	289	877	450	470	540	495	463	16–22	565	515	480	16–26	580	515	480	16–30	140
18	450	222	320	938	480	490	595	550	518	16–22	615	565	530	20–26	640	565	530	20–30	180
20	500	229	343	993	480	490	645	600	568	20–22	670	620	582	20–26	715	620	582	20–33	215
24	600	267	413	1131	480	490	755	705	667	20–26	780	725	682	20–30	840	725	682	20–36	290
28	700	292	178	1476	640	660	890	810	772	24–26	895	840	794	24–30	910	840	794	24–36	560
32	800	318	525	1533	640	660	975	920	878	24–30	1015	950	901	24–33	1025	950	901	24–39	910
36	900	330	585	1655	750	860	1075	1020	978	24–30	1115	1050	1001	28–33	1125	1050	1001	28–39	1500
40	1000	410	640	1765	850	900	1175	1120	1078	28–30	1230	1160	1112	28–36	1255	1160	1112	28–42	1750
48	1200	470	755	1995	850	900	1405	1340	1295	32–33	1455	1380	1328	32–39	1485	1380	1328	32–48	2180
56	1400	530	910	2310	1000	925	1630	1560	1510	36–36	1675	1590	1530	36–42	1685	1590	1530	36–48	2400
64	1600	600	1030	2595	1000	925	1830	1760	1710	40–36	1915	1820	1750	40–48	1930	1820	1750	40–56	2870
72	1800	670	1140	2810	1100	980	2045	1970	1918	44–39	2115	2020	1950	44–48	2130	2020	1950	44–56	3380
80	2000	760	1250	3100	1100	980	2265	2180	2125	48–42	2325	2230	2150	48–48	2345	2230	2150	48–60	4010

BUTT WELDED BUTTERFLY VALVE

Design feature

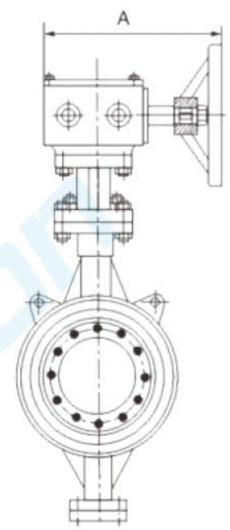

Materials of parts

Body	WCB/LCB/CF8M/CF8/CF3M/CF3/WC6/WC9/CD3MN/C95800
Disc	WCB+ENP/LCB/CF8M/CF8/CF3M/CF3/WC6/WC9/CD3MN/C95800
Seat	STL/13Cr/316/316L/304/304L/F316L/Monel/F51
Stem	F6a/17-4PH/F304/F316/F304L/F316L/F51/Monel
Ring	304+Flexible graphite/316+Flexible graphite/PTFE+SS/SS+STL
Bolt	B7/B7M/B8M/L7M/B16M
Nut	2H/2HM/8M/7M/4M
Bushing sleeve	C95200/C95500/PTFE+Bronze/SS+Nitride
Gasket	Flexible graphite+304/Flexible graphite+316
Packing	Flexible graphite

Materials could be choosed according to customers' requirement & working condition.

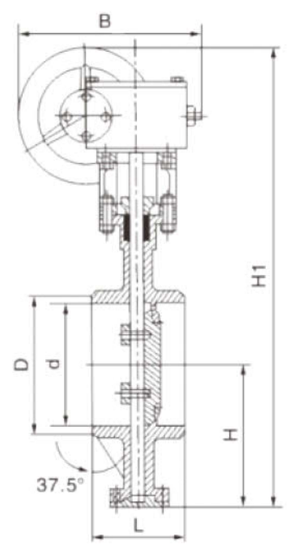

Applicable Standards:

- DESIGN STANDARD: API 609, ASME B16.34
- WELDING DIMENSION: ASME B16.25
- FACE-TO-FACE: API 609
- PRESSURE TEST: API 598

BUTT WELDED BUTTERFLY VALVE

Dimension

PN MPa	NPS inch	DN	L	D	H	Manual				Actuator			
						H1	A	B	W kg	H1	A	B	W kg
CLASS 150Lb	6"	150	210	161	230	385	66	150	44	385	66	150	97
	8"	200	230	222	297	471	85	170	82	471	85	170	100
	10"	250	250	278	327	533	85	170	103	533	85	170	127
	12"	300	270	330	364	606	106	205	132	606	106	205	170
	14"	350	290	382	404	694	106	205	164	694	106	205	206
	16"	400	310	432	444	757	130	240	193	757	130	240	244
	18"	450	330	484	472	814	155	240	240	814	155	240	302
	20"	500	350	535	522	902	169	306	309	902	169	306	373
	24"	600	390	636	5902	1048	198	324	460	1048	198	324	561
	28"	700	430	726	810	1277	220	335	817	1277	220	335	993
	32"	800	470	826	844	1385	241	356	1100	1385	241	356	1354
	36"	900	510	926	890	1490	241	356	1430	1490	241	356	1725
	40"	1000	550	1028	950	1620	241	356	1880	1623	241	356	2260
	48"	1200	630	1228	1340	2191	35	785	2230	2191	35	785	2830
CLASS 300Lb	6"	150	210	161	280	445	66	150	56	445	66	150	106
	8"	200	230	222	297	510	85	170	102	510	85	170	192
	10"	250	250	278	339	569	85	170	136	569	85	170	268
	12"	300	270	330	375	653	106	205	261	653	106	205	370
	14"	350	290	382	463	730	106	205	284	730	106	205	463
	16"	400	310	432	495	810	130	240	323	810	130	240	548
	18"	450	330	484	566	850	155	240	503	850	155	240	697
	20"	500	3540	535	6+30	940	169	306	553	940	169	306	868
	24"	600	390	636	727	1150	198	324	904	1150	198	324	1032
	28"	700	430	736	775	-	-	-	-	1228	241	356	1268
	30"	750	470	786	780	-	-	-	-	1480	241	356	1504
	32"	800	470	826	835	-	-	-	-	1590	241	356	2035
	36"	900	510	926	895	-	-	-	-	2140	35	785	2700
	40"	1000	550	1028	957	-	-	-	-	2444	35	785	3085

DOUBLE ECCENTRIC HIGH PERFORMANCE BUTTERFLY VALVE

Design feature

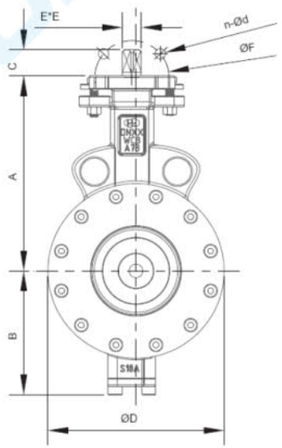

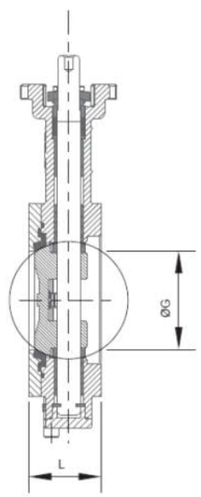

Materials of parts

Body	WCB/LCB/CF8M/CF8/CF3M/CF3/WC6/WC9/CD3MN/C95800
Disc	WCB+ENP/LCB/CF8M/CF8/CF3M/CF3/WC6/WC9/CD3MN/C95800
Seat	STL/13Cr/316/316L/304/304L/F316L/Monel/F51
Stem	F6a/17-4PH/F304/F316/F304L/F316L/F51/Monel
Ring	304+Flexible graphite/316+Flexible graphite/PTFE+SS/SS+STL
Bolt	B7/B7M/B8M/L7M/B16M
Nut	2H/2HM/8M/7M/4M
Bushing sleeve	C95200/C95500/PTFE+Bronze/SS+Nitride
Gasket	Flexible graphite+304/Flexible graphite+316
Packing	Flexible graphite

Materials could be choosed according to customers' requirement & working condition.

Applicable Standards:

- DESIGN STANDARD: API 609, ASME B16.34
- CONNECTION DIMENSION: ASME B16.25, ASME B16.34
- FACE-TO-FACE: API 609, ISO 5752
- PRESSURE TEST: API 598, ISO 5208

DOUBLE ECCENTRIC HIGH PERFORMANCE BUTTERFLY VALVE

Dimension

Class150

NPS inch	DN	A mm	B mm	C mm	D mm	E mm	Top Flange mm	G mm	L mm	WT kg
2"	50	126	79	13.5	92	11	F05	45	43	3
2 1/2"	65	126	87	13.5	105	11	F05	45	46	4
3"	80	145	100	17.5	130	11	F07	72	48	5
4"	100	170	124	17.5	157	14	F07	91	54	6
5"	125	185	144	17.5	186	14	F07	114	57	9
6"	150	203	150	18.5	216	17	F10	145	57	12
8"	200	239	186	24.5	269	22	F10	192	64	19
10"	250	275	226	24.5	324	22	F10	240	71	33
12"	300	307	251	30	380	27	F12	285	81	42
14"	350	337	294	30	416	27	F12	328	92	61
16"	400	368	320	30	476	27	F14	373	102	88
18"	450	406	341	39	534	36	F16	422	114	135
20"	500	442	383	49	588	46	F16	470	127	173
24"	600	493	442	49	692	46	F25	570	154	272

Class300

NPS inch	DN	A mm	B mm	C mm	D mm	E mm	Top Flange mm	G mm	L mm	WT kg
2"	50	126	79	13.5	92	11	F05	45	43	3
2 1/2"	65	126	87	13.5	105	11	F05	45	46	4
3"	80	145	100	17.5	130	11	F07	72	48	5
4"	100	170	124	17.5	157	14	F07	91	54	6
5"	125	185	144	17.5	186	14	F07	114	57	9
6"	150	203	150	18.5	216	17	F10	145	57	12
8"	200	2257	204	24.5	269	22	F10	192	73	23
10"	250	288	238	30	324	27	F12	240	83	39
12"	300	330	268	30	380	27	F12	285	92	55
14"	350	337	294	39	416	36	F14	320	117	79
16"	400	368	320	49	476	46	F16	363	133	103
18"	450	406	341	49	534	46	F16	400	149	170
20"	500	442	383	49	588	46	F25	450	159	225
24"	600	500	442	58	692	55	F25	550	181	338

Flanged Ends Dimension

Class 150/300

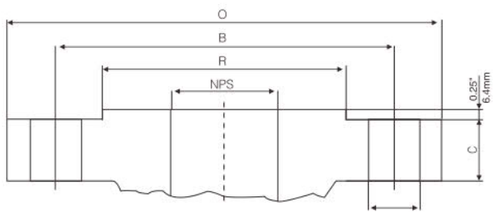

ANSI Class150Lb/300Lb
0.25"(6.4mm) Raised face joint

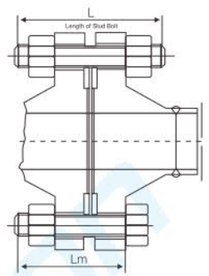

Length of Machine Bolt

Class150

NPS		O		C		R		B		D		Bolt		L		Lm	
in	mm	in	mm	in	mm	in	mm	in	mm	in	mm	QTY	Diam	in	mm	in	mm
2	50	6.00	152.4	0.75	19.1	3.62	91.9	4.75	120.7	0.75	19.1	4	5/8	3.25	82.6	2.75	69.9
2 1/2	65	7.00	177.8	0.88	2.4	4.12	104.6	5.50	139.7	0.75	19.1	4	5/8	3.50	88.9	3.00	76.2
3	80	7.50	190.5	0.94	23.9	5.00	127.0	6.00	152.4	0.75	19.1	4	5/8	3.50	88.9	3.00	76.2
4	100	9.00	228.6	0.94	23.9	6.19	157.2	7.50	190.5	0.75	19.1	8	5/8	3.50	88.9	3.00	76.2
5	25	10.00	254.0	0.94	23.9	7.31	185.7	8.50	215.9	0.88	22.4	8	3/4	3.75	95.3	3.25	82.6
6	150	11.00	279.4	1.00	25.4	8.50	215.9	9.50	241.3	0.88	22.4	8	3/4	4.00	101.6	3.25	8.6
8	200	13.50	342.9	1.12	28.4	10.62	269.7	11.75	298.5	0.88	22.4	8	3/4	4.25	108.0	3.50	88.9
10	250	16.00	406.4	1.19	30.2	12.75	323.9	14.25	362.0	1.00	25.4	12	7/8	4.50	114.3	4.00	101.6
12	300	19.00	482.6	1.25	31.8	15.00	381.0	17.00	431.8	1.00	25.4	12	7/8	4.75	120.7	4.00	101.6
14	350	21.00	533.4	1.38	35.1	16.25	412.8	18.75	476.3	1.12	28.4	12	1	5.25	133.4	4.50	114.3
16	400	23.50	596.9	1.44	36.6	18.50	469.9	21.25	539.8	1.12	28.4	16	1	5.25	133.4	4.50	114.3
18	450	25.00	635.0	1.56	39.6	21.00	533.4	22.75	577.9	1.25	31.8	16	1 1/8	5.75	146.1	5.00	127.0
20	500	27.50	698.5	1.69	42.9	23.00	584.2	25.00	635.0	1.25	31.8	20	1 1/8	6.25	158.8	5.50	139.7
24	600	32.00	812.88	1.88	47.8	27.25	692.2	39.50	749.3	1.38	35.1	20	1 1/4	6.75	171.5	6.00	152.4
26	650	34.25	70.0	2.69	68.3	29.50	749.3	31.75	806.5	1.38	35.1	24	1 1/4	8.25	209.6	7.50	190.5
28	700	36.50	927.1	2.81	71.4	31.50	800.1	34.00	863.6	1.38	35.1	28	1 1/4	8.50	215.9	7.75	196.9
30	750	38.75	984.3	2.94	74.7	33.75	857.3	36.00	914.4	1.38	35.1	28	1 1/4	9.00	228.6	8.00	203.2
32	800	41.75	1060.5	3.18	80.8	36.00	914.4	38.50	977.9	1.62	41.1	28	1 1/2	9.75	247.7	8.75	222.3
34	850	43.75	1111.3	3.25	82.6	38.00	965.2	40.50	1028.7	1.62	41.1	32	1 1/2	10.00	254.0	9.00	228.6
36	900	46.00	1168.4	3.56	90.4	40.25	1022.4	42.75	1085.9	1.62	41.1	32	1 1/2	10.50	266.7	9.50	241.3

Class300

NPS		O		C		R		B		D		Bolt		L		Lm	
in	mm	in	mm	in	mm	in	mm	in	mm	in	mm	QTY	Diam	in	mm	in	mm
2	50	6.50	165.1	0.88	22.4	3.62	91.9	5.00	127.0	0.75	19.1	8	5/8	3.50	101.6	3.00	76.2
2 1/2	65	7.50	190.5	1.00	25.4	4.12	104.6	5.88	149.4	0.88	22.4	8	3/4	4.00		3.25	82.6
3	80	8.25	209.6	11.12	28.4	5.00	127.0	6.62	168.1	0.88	22.4	8	3/4	4.25	120.7	3.50	88.9
4	100	10.00	254.0	1.25	31.8	6.19	157.2	7.88	200.2	0.88	22.4	8	3/4	4.50	127.0	3.75	95.3
5	25	11.00	279.4	1.38	35.1	7.31	185.7	9.25	235.0	0.88	22.4	8	3/4	4.75	133.4	4.25	108.0
6	150	12.50	317.5	1.44	36.6	8.50	215.9	0.62	269.7	0.88	22.4	12	3/4	4.75	139.7	4.25	108.0
8	200	15.00	381.0	1.62	41.1	10.62	269.7	13.00	330.2	1.00	25.4	12	7/8	5.50	152.4	4.75	120.7
10	250	17.50	444.5	1.88	47.8	12.75	323.9	15.25	387.4	1.12	28.4	16	1	6.25	171.5	5.50	139.7
12	300	20.50	520.7	2.00	50.8	15.00	381.0	17.75	450.9	1.25	31.8	16	1 1/8	6.75	184.2	5.75	146.1
14	350	23.00	584.2	2.12	53.8	16.25	412.8	20.25	514.4	1.25	31.8	20	1 1/8	7.00	190.5	6.25	158.8
16	400	25.50	647.7	2.25	57.2	18.50	469.9	22.50	571.5	1.38	35.1	20	1 1/4	7.50	203.2	6.50	165.1
18	450	28.00	711.2	2.38	60.5	21.00	533.4	24.75	628.7	1.38	35.1	24	1 1/4	7.75	209.3	6.75	171.5
20	500	30.50	774.7	2.50	63.5	23.00	584.2	27.00	685.8	1.38	35.1	24	1 1/4	8.00	222.3	7.25	184.2
24	600	36.00	914.4	2.75	69.9	27.25	692.2	32.00	812.8	1.62	41.1	24	1 1/2	9.00	254.0	8.00	203.2
26	650	38.25	971.6	3.12	79.2	29.50	749.3	34.50	876.3	1.75	44.5	28	1 5/8	10.25	285.8	9.25	235.0
28	700	40.75	1035.1	3.38	85.9	31.50	800.1	37.00	939.8	1.75	44.5	28	1 5/8	10.75	298.5	9.75	247.7
30	750	43.00	1092.2	3.62	91.9	33.75	857.3	39.25	997.0	1.88	47.8	28	1 3/4	11.50	317.5	10.50	266.7
32	800	45.25	1149.4	3.88	98.6	36.00	914.4	41.50	1054.1	2.00	50.8	28	1 7/8	12.25	342.9	11.25	285.8
34	850	47.50	1206.5	4.00	101.6	38.00	965.2	43.50	1104.9	2.00	50.8	28	1 7/8	12.75	349.3	11.75	298.5
36	900	50.00	1270.0	4.12	104.6	40.25	1022.4	46.00	1168.4	2.12	53.8	32	2	13.25	362.0	12.25	311.2

Flanged Ends Dimension

Class 600/900

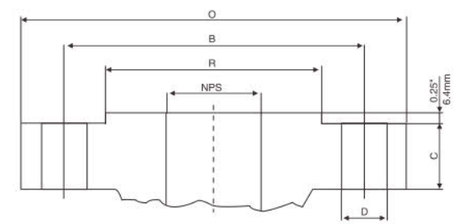

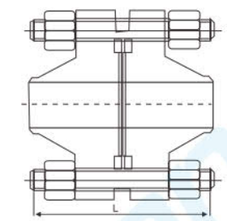

ANSI Class600Lb/900Lb
0.25"(6.4mm) Raised face joint

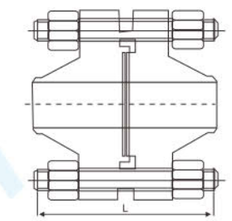

ANSI Class600Lb/900Lb
Male & female

Class600

NPS		O		C		R		B		D		Bolt		L		LRTJ		Lm	
in	mm	in	mm	in	mm	in	mm	in	mm	in	mm	QTY	Diam	in	mm	in	mm	in	mm
2	50	6.50	165.1	1.00	25.4	3.62	91.9	5.00	127.0	0.75	19.1	8	5/8	4.25	18.0	4.25	108.0	4.00	101.6
2 1/2	65	7.50	190.5	1.12	28.4	4.12	104.6	5.88	149.4	0.88	22.4	8	3/4	4.75	120.7	4.75	120.7	4.50	114.3
3	80	8.25	209.6	1.25	31.8	5.00	127.0	6.62	168.1	0.88	22.4	8	3/4	5.00	127.0	5.00	127.0	4.75	120.7
4	100	10.75	273.1	1.50	38.1	6.19	157.2	8.50	215.9	1.00	25.4	8	7/8	5.75	146.1	5.75	146.1	5.50	139.7
5	25	13.00	330.2	1.75	44.5	7.31	185.7	10.50	266.7	1.12	28.4	8	1	6.50	165.1	6.50	165.1	6.25	158.8
6	150	14.00	355.6	1.88	47.8	8.50	215.9	11.50	292.1	1.12	28.4	12	1	6.75	171.5	6.75	171.5	6.50	165.1
8	200	16.50	419.1	2.19	55.6	10.62	269.7	137.5	349.3	1.25	31.8	12	1 1/8	7.50	190.5	7.50	190.5	7.25	184.2
10	250	20.00	508.8	2.50	63.5	12.75	323.9	17.00	431.8	1.38	35.1	16	1 1/4	8.50	215.9	8.50	215.9	8.25	209.6
12	300	22.00	558.8	2.62	66.5	15.00	381.0	19.25	489.0	1.38	35.1	20	1 1/4	8.75	222.3	8.75	222.3	8.50	215.9
14	350	23.75	6.03.3	2.75	69.9	16.25	412.8	20.75	527.1	1.50	38.1	230	1 3/8	9.25	235.0	9.25	235.0	9.00	228.6
16	400	27.00	685.8	3.00	76.2	18.50	469.9	23.75	603.3	1.62	41.1	20	1 1/2	10.00	254.0	10.00	254.0	9.75	247.7
18	450	29.25	743.0	3.25	82.6	21.00	533.4	25.75	6854.1	1.75	44.5	20	1 5/8	10.75	273.1	10.75	273.1	10.50	266.7
20	500	32.00	812.8	3.50	88.9	23.00	584.2	28.50	723.9	1.75	44.5	24	1 5/8	11.25	285.8	11.250	292.1	11.00	279.4
24	600	37.00	939.8	4.00	101.6	27.25	692.2	33.00	838.2	2.00	50.8	24	1 7/8	13.00	33.02	13.25	336.6	12.75	323.9
26	650	40.00	1016.0	4.25	108.0	29.50	749.3	36.00	914.4	2.00	50.8	28	1 7/8	14.00	355.6	14.00	355.6	13.75	349.3
28	700	42.25	1073.2	4.38	111.3	31.50	800.1	38.00	965.2	2..12	53.8	28	2	14.50	368.3	14.50	368.3	14.25	362.0
30	750	44.50	113.03	4.50	114.3	33.75	857.3	40.25	1022.4	2.12	53.8	28	2	15.00	381.0	14.75	3754.7	14.75	374.7
32	800	47.00	1193.8	4.62	117.3	36.00	914.4	42.50	1079.5	2.38	60.5	28	2 1/4	15.50	393.7	15.75	400.1	15.25	387.4
34	850	49.00	1244.6	4.75	120.7	38.00	965.2	44.50	1130.3	2.38	60.5	28	2 1/4	16.25	412.8	16.25	412.8	16.00	406.4
36	900	51.75	1314.5	4.88	124.0	40.25	1022.4	47.00	1193.8	2.62	66.5	28	2 1/2	15.75	400.1	16.75	425.5	15.50	393.7

Class900

NPS		O		C		R		B		D		Bolt		L		LRTJ		Lm	
in	mm	in	mm	in	mm	in	mm	in	mm	in	mm	QTY	Diam	in	mm	in	mm	in	mm
2	50	8.50	215.9	1.50	38.1	3.62	91.9	6.50	165.1	1.00	25.4	8	7/8	5.75	146.1	5.75	146.1	5.50	139.7
2 1/2	65	9.62	244.3	1.62	41.1	4.12	104.6	7.50	190.5	1.12	28.4	8	1	6.25	158.8	6.25	158.8	6.00	152.4
3	80	9.50	241.3	1.50	38.1	5.00	127.0	7.50	190.5	1.00	25.4	8	7/8	5.75	146.1	5.75	146.1	5.50	139.7
4	100	11.50	292.1	1.75	44.5	6.19	157.2	9.25	235.0	1.25	31.8	8	1 1/8	6.75	171.5	6.75	171.5	6.50	165.1
5	25	13.75	349.3	2.00	50.8	7.31	185.7	11.00	279.4	1.38	35.1	8	1 1/4	7.50	190.5	7.50	190.5	7.25	184.2
6	150	15.00	381.0	2.19	55.6	8.50	215.9	12.50	317.5	1.25	31.8	12	1 1/8	7.50	190.5	7.75	196.9	7.25	184.2
8	200	18.50	469.9	2.50	63.5	10.62	269.7	15.50	393.7	1.50	38.1	12	1 3/8	8.75	222.3	8.75	222.3	8.50	215.9
10	250	21.50	546.1	2.75	69.9	12.75	323.9	18.50	469.9	1.50	38.1	16	1 3/8	9.25	235.0	9.25	235.0	9.00	228.6
12	300	24.00	609.6	3.12	79.2	15.00	381.0	21.00	533.4	1.50	38.1	20	1 3/8	10.00	254.0	10.00	254.0	9.75	247.7
14	350	25.25	641.4	3.38	85.9	16.25	412.8	22.00	558.8	1.62	41.1	20	1 1/2	10.75	273.1	11.00	279.4	10.50	266.7
16	400	27.75	704.9	3.50	88.9	18.50	469.9	24.25	616.0	1.75	44.5	20	1 5/8	11.25	285.8	11.50	292.1	11.00	279.4
18	450	31.00	787.4	4.00	101.6	21.00	533.4	27.00	685.8	2.00	50.8	20	1 7/8	12.75	23.9	13.25	336.6	12.50	317.5
20	500	33.75	857.3	4.25	108.0	23.00	584.2	29.50	749.3	2.12	53.8	20	2	13.75	349.3	14.25	362.0	13.50	342.9
24	600	41.00	1041.4	5.50	139.7	27.25	692.2	35.50	901.7	2.62	66.5	20	2 1/2	17.25	438.2	18.00	457.2	17.00	431.8

Flanged Ends Dimension

Class 1500/2500

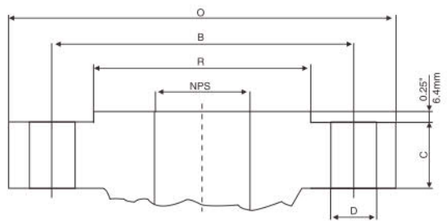

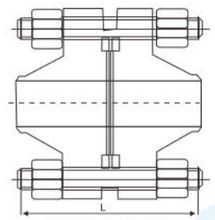

ANSI Class600Lb/900Lb
0.25"(6.4mm) Raised face joint

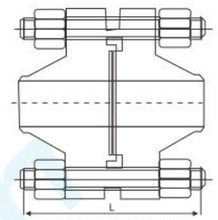

ANSI Class600Lb/900Lb
male & female

Class1500

NPS		O		C		R		B		D		Bolt		L		L_{RTJ}		Lm	
in	mm	in	mm	in	mm	in	mm	in	mm	in	mm	QTY	Diam	in	mm	in	mm	in	mm
2	50	8.50	215.9	1.50	38.1	3.62	91.9	6.50	165.1	1.00	25.4	8	7/8	5.75	146.1	5.75	146.1	5.50	139.7
2 1/2	65	9.62	244.3	1.62	41.1	4.12	104.6	7.50	190.5	1.012	28.4	8	1	6.25	158.8	6.25	158.8	6.00	152.4
3	80	10.50	266.7	1.88	47.8	5.00	127.0	8.00	203.2	1.25	31.8	8	1 1/8	7.00	177.8	7.00	177.8	6.75	171.5
4	100	12.25	311.2	2.12	53.8	6.19	157.2	9.50	241.3	1.38	35.1	8	1 1/4	7.75	196.9	7.75	196.9	7.50	190.5
5	25	14.75	374.7	2.88	73.2	7.31	185.7	11.50	292.1	1.62	41.1	8	1 1/2	9.75	247.7	9.75	247.7	9.50	241.3
6	150	15.50	393.7	3.25	82.6	8.50	215.9	12.50	317.5	1.50	38.1	12	1 3/8	10.25	260.4	10.50	266.7	10.00	254.0
8	200	19.00	482.6	3.62	91.9	10.62	269.7	15.50	393.7	1.75	44.5	12	1 5/8	11.50	292.1	12.75	323.9	11.25	285.8
10	250	23.00	584.2	4.25	108.0	12.75	323.9	19.00	482.6	2.00	50.8	12	1 7/8	13.25	336.6	13.50	342.9	13.00	330.2
12	300	26.50	673.1	4.88	124.0	15.00	381.0	22.50	571.5	2.12	53.8	16	2	14.75	374.7	15.25	387.4	14.50	368.3
14	350	29.50	749.3	5.25	133.4	16.25	412.8	25.00	635.0	2.38	60.5	16	2 1/4	16.00	406.4	16.75	425.5	157.75	400.1
16	400	32.50	825.5	5.75	146.1	18.50	469.9	27.50	704.9	2.62	66.5	16	2 1/2	17.50	444.5	18.50	469.9	17.25	438.2
18	450	36.00	914.4	6.38	162.1	21.00	533.4	30.50	774.7	2.88	73.2	16	2 3/4	19.50	495.3	20.75	527.1	19.25	489.0
20	500	38.75	984.3	7.00	177.8	23.00	584.2	32.75	831.9	3.12	79.2	16	2	21.25	539.8	22.25	565.2	21.00	533.4
24	600	46.00	1168.4	8.00	203.2	27.25	692.2	39.00	990.6	3.62	91.9	16	3 1/2	24.25	616.0	25.50	647.7	24.00	609.6

Class2500

NPS		O		C		R		B		D		Bolt		L		L_{RTJ}		Lm	
in	mm	in	mm	in	mm	in	mm	in	mm	in	mm	QTY	Diam	in	mm	in	mm	in	mm
2	50	9.25	235.0	2.00	50.8	3.62	91.9	6.75	171.5	1.12	28.4	8	1	7.00	177.8	7.00	177.8	6.75	171.5
2 1/2	65	10.50	266.7	2.25	57.2	4.12	104.6	7.75	196.9	1.25	31.8	8	1 1/8	7.75	196.9	8.00	203.2	7.50	190.5
3	80	12.00	304.8	2.62	66.5	5.00	127.0	9.00	228.6	1.38	35.1	8	1 1/4	8.75	222.3	9.00	228.6	8.50	215.9
4	100	14.00	355.6	3.00	76.2	6.19	157.2	10.75	273.1	1.62	41.1	8	1 1/2	10.00	254.0	10.25	260.4	9.75	247.7
5	25	16.50	419.1	3.62	91.9	7.31	185.7	12.75	323.9	1.88	47.8	8	1 3/4	11.75	298.5	12.25	311.2	11.50	292.1
6	150	19.00	482.6	4.25	108.0	8.50	215.9	14.50	368.3	2.12	53.8	8	2	13.50	342.9	14.00	355.6	13.25	336.6
8	200	21.75	552.5	5.00	127.0	10.62	269.7	17.25	438.2	2.12	53.8	12	2	15.00	381.0	15.50	393.7	14.75	374.7
10	250	26.50	673.1	6.50	165.1	12.75	323.9	21.25	539.8	2.12	66.5	12	2 1/2	19.25	489.0	20.00	508.0	19.00	482.6
12	300	30.00	762.0	7.25	184.2	15.00	381.0	24.38	619.3	2.88	73.2	12	2 3/4	21.25	539.8	22.00	558.8	21.00	533.4

Materials Characteristic

1	2	3	4	5	6	7	8	9	10	11	12	13	14	15	16	17
	ASTM Specification	Chemical Analysis										Mechanical Properties				
		C	Mn	Si	P	S	Cr	Ni	Mo	Cu	V	Tensile	Yield	Elongation	Reduction	Hardness
		Carbon	Manganese	Silicon	Phosphorus	Sulfur	Chromium	Nickel	Molybdenum	Copper	Vanadium	Mpa	Mpa	%	of area,%	HB
		Nominal or maximum,%										Min				Max
																Cast steel
Carbon steel	A216-WCA	0.25	0.70	0.60	0.040	0.045	0.50	0.50	0.20	0.30	0.03	415-585	205	24	35	–
	A216-WCB	0.30	1.00	0.60	0.040	0.045	0.50	0.50	0.20	0.30	0.03	485-655	250	22	35	–
	A216-WCC	0.25	1.20	0.60	0.040	0.045	0.50	0.50	0.20	0.30	0.03	485-655	275	22	35	–
																Cast steel
Chrome-molybdeum steel	A217-WC1	0.25	0.50-0.80	0.60	0.040	0.045	0.35	0.45-0.65	0.45-0.65	0.50	–	450-620	240	24	35	–
	A217-WC6	0.05-0.20	0.50-0.80	0.60	0.040	0.045	1.00-1.50	0.50	0.45-0.65	0.50	–	485-655	275	20	35	–
	A217-WC9	0.02-0.18	0.40-0.70	0.60	0.040	0.045	2.00-2.75	0.50	0.90-1.20	0.50	–	485-655	275	20	35	–
	A217-C5	0.20	0.40-0.70	0.75	0.040	0.045	4.00-6.50	0.50	0.45-0.65	0.50	–	620-795	415	18	35	–
	A217-C12	0.20	0.35-0.65	1.00	0.040	0.045	8.00-10.0	0.50	0.90-1.20	0.50	–	620-795	415	18	35	–
																Cast steel
Ni alloy steel	A494 M-35-1	0.35	1.50	1.25	0.030	0.030	–	Allowance	–	26.0-33.0	Fe ˇ 3.50	450	170	25	–	–
	A494 CW-6M	0.07	1.00	1.00	0.040	0.030	17.0-20.0	Allowance	17.0-20.0	–	Fe ˇ 3.00	495	275	25	–	–
	A494 CY-40	0.40	1.50	3.00	0.030	0.030	14.0-17.0	Allowance	–	–	Fe ˇ 11.0	185	195	30	–	–
																Cast steel
Stainless steel	A351-CF8	0.08	1.50	2.00	0.040	0.040	18.0-21.0	8.0-11.0	0.50	–	–	485	205	35	35	–
	A351-CF8M	0.08	1.50	1.50	0.040	0.040	18.0-21.0	9.0-12.0	2.0-3.0	–	–	485	205	30	30	–
	A351-CF3	0.03	1.50	2.00	0.040	0.040	17.0-21.0	8.0-12.0	0.50	–	–	485	205	35	35	–
	A351-CF3M	0.03	1.50	1.50	0.040	0.040	17.0-21.0	9.0-13.0	2.0-3.0	–	–	485	205	30	30	–
	A351-CN7M	0.07	1.50	1.50	0.040	0.040	19.0-22.0	27.5-30.5	2.0-3.0	3.0-4.0	–	450	170	35	35	–
																Cast steel
Carbon steel	A352-LCB	0.30	1.00	0.60	0.040	0.045	0.50	0.50	0.20	0.30	0.03	450-650	240	24	35	–
	A352-LCC	0.25	1.20	0.60	0.040	0.045	0.50	0.50	0.20	0.30	0.03	485-655	275	22	35	–
	A352-LC1	0.25	0.50-0.80	0.60	0.040	0.045	–	–	0.45-0.65	–	–	450-620	240	24	35	–
	A352-LC2	0.25	0.50-0.80	0.60	0.040	0.045	–	2.00-3.00	–	–	–	485-655	275	24	35	–
	A352-LC3	0.15	0.50-0.80	0.60	0.040	0.045	–	3.00-4.00	–	–	–	485-655	275	24	35	–
																Forged steel
Carbon steel	A105(N)	0.35	0.60-1.05	0.35	0.040	0.050	0.30	0.40	0.12	0.40	0.03	485	250	30	30	187
	A350-LF1	0.30	1.35	0.15-0.3	0.035	0.040	0.30	0.40	0.12	0.40	0.03	415-585	205	25	38	–
	A350-LF2	0.30	1.35	0.15-0.30	0.035	0.040	0.30	0.40	0.12	0.40	0.03	485-655	252	22	30	–
	A350-LF3	0.20	0.90	0.20-0.35	0.035	0.040	0.30	3.25-3.7	0.12	0.40	0.03	485-655	260	22	35	–
	A350-LF9	0.20	0.40-1.06	–	0.035	0.040	0.30	1.60-2.24	0.12	0.75-1.25	0.03	435-605	315	25	38	–
																Forged steel
Stainless steel	A182-F304	0.08	2.00	1.00	0.040	0.030	18.0-20.0	8.0-11.0	–	–	–	515	205	30	50	–
	A182-F316	0.08	2.00	1.00	0.040	0.030	16.0-18.0	10.0-14.0	2.0-3.0	–	–	515	205	30	50	–
	A182-F304L	0.03	2.00	1.00	0.045	0.030	18.0-20.0	8.0-13.0	–	–	–	485	170	30	50	–
	A182-F316L	0.03	2.00	1.00	0.045	0.030	16.0-18.0	10.0-15.0	2.0-3.0	–	–	485	170	30	50	–
																Component part
Trim	A276-304	0.08	2.00	1.00	0.045	0.030	18.0-20.0	8.0-10.5	–	–	–	515	205	40	50	–
	A276-316	0.05	2.00	1.00	0.045	0.030	16.0-18.0	10.0-14.0	2.0-3.0	–	–	485	170	40	50	–
	A276-410	0.15	1.00	1.00	0.040	0.030	11.5-13.5	–	–	–	–	480	275	20	45	–
	A276-420	0.15	1.00	1.00	0.040	0.030	12.0-14.0	–	–	–	–	–	–	–	–	241
	A182-F6A	0.15	1.00	1.00	0.040	0.030	11.5-13.5	0.50	–	–	–	585	380	18	35	167-229
																Fastening piece
Stud	A193-B7	0.37-0.49	0.65-1.10	01.5-0.35	0.035	0.040	0.75-1.20	–	0.15-0.25	–	–	860	720	16	50	–
	A193-B7M	0.37-0.49	0.65-1.10	0.15-0.35	0.035	0.040	0.75-1.20	–	0.15-0.25	–	–	690	550	18	50	235
	A193-B8	0.08	2.00	1.00	0.045	0.030	18.0-20.0	8.0-10.50	–	–	–	515	205	30	50	223
	A193-B8A	0.08	2.00	1.00	0.045	0.030	18.0-20.0	8.0-10.50	–	–	–	515	205	30	50	192
	A193-B8M	0.08	2.00	1.00	0.045	0.030	16.0-18.0	10.0-14.0	2.0-3.0	–	–	515	205	30	50	192
	A320-L7	0.38-0.48	0.75-1.00	0.15-0.35	0.035	0.040	0.80-1.10	–	0.15-0.25	–	–	860	725	16	50	–
Nut	A194-2H	ˇ 0.40	1.00	0.40	0.040	0.050	–	–	–	–	–	–	–	–	–	248-352
	A194-2HM	ˇ 0.40	1.00	0.40	0.040	0.050	–	–	–	–	–	–	–	–	–	159-237
	A194-7	0.37-0.49	0.65-1.00	0.15-0.35	0.040	0.040	0.75-1.20	–	0.15-0.25	–	–	–	–	–	–	248-352
	A197-8	0.08	2.00	1.00	0.045	0.030	18.0-1.20	8.0-10.5	–	–	–	–	–	–	–	126-300
	A194-8M	0.08	2.00	1.00	0.045	0.030	16.0-18.0	10.0-14.0	2.0-3.0	–	–	–	–	–	–	126-300

APITrim NO.Table

No of internal parts	Seat ring or body	Gate、disc、ball or body	Stem	No of internal parts	Seat ring or body	Gate、disc、ball or body	Stem
01	13Cr	13Cr	13Cr	31	STELLITE	321SS	321SS
02	304SS	304SS	304SS	32	STELLITE	STELLITE	321SS
03	310SS	310SS	310SS	33	347SS	347SS	347SS
04	HARD 13Cr	HARD 13Cr	13Cr	34	STELLITE	347SS	347SS
05	STELLITE	STELLITE	13Cr	35	NICKEL ALLOY	13Cr	13Cr
06	Cu-Ni	13Cr	13Cr	36	A105/PTFE	A105+ENP	A105+ENP
07	13Cr	HARD 13Cr	13Cr	37	A105/PTFE	WCB+ENP	A105+ENP
08	STELLITE	13Cr	13Cr	38	13Cr/PTFE	13Cr	13Cr
09	Cu-Ni	Cu-Ni	Cu-Ni	39	304SS/PTFE	304SS	304SS
10	316SS	316SS	316SS	40	316SS/PTFE	316SS	316SS
11	Cu-Ni	STELLITE	Cu-Ni	41	A105/RPTFE	A105+ENP	A105+ENP
12	STELLITE	316SS	316SS	42	A105/RPTFE	WCB+ENP	A105+ENP
13	ALLOY 20	ALLOY 20	ALLOY 20	43	13Cr/RPTFE	13Cr	13Cr
14	STELLITE	ALLOY 20	ALLOY 20	44	304SS/RPTFE	304SS	304SS
15	STELLITE	STELLITE	304SS	45	316SS/RPTFE	316SS	316SS
16	STELLITE	STELLITE	316SS	46	A105/NYLON	A105+ENP	A105+ENP
17	STELLITE	STELLITE	347SS	47	A105/NYLON	WCB+ENP	A105+ENP
18	STELLITE	STELLITE	ALLOY 20	48	A105/NYLON	304SS	304SS
19	MONEL	MONEL	MONEL	49	A105/NYLON	316SS	316SS
20	BRONZE	BRONZE	13Cr	50	13Cr/NYLON	13Cr	13Cr
21	HASTELLOY B	HASTELLOY B	HASTELLOY B	51	304SS/NYLON	304SS	304SS
22	-	HASTELLOY C	HASTELLOY C	52	316SS/NYLON	316SS	316SS
23	STELLITE	304SS	304SS	53	A105/PEEK	A105+ENP	A105+ENP
24	304LSS	304LSS	304LSS	54	A105/PEEK	WCB+ENP	A105+ENP
25	STELLITE	304LSS	304LSS	55	13Cr/PEEK	13Cr	13Cr
26	STELLITE	STELLITE	304LSS	56	304SS/PEEK	304SS	304SS
27	316LSS	316LSS	316LSS	57	316SS/PEEK	316SS	316SS
28	STELLITE	316LSS	316LSS	-	-	-	-
29	STELLITE	STELLITE	316LSS	-	-	-	-
30	321SS	321SS	321SS	-	-	-	-

Note:please indicate it directly in the order for the internal part' smaterial uncovered in the table